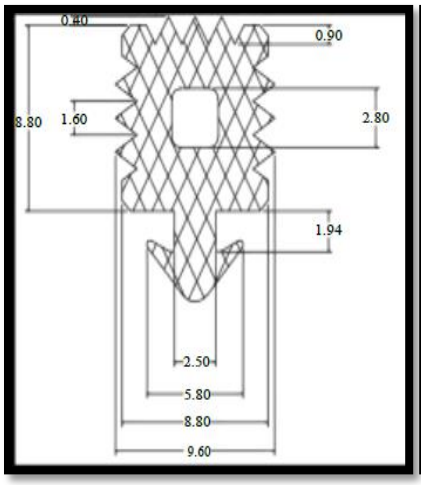
0.40
0.90
8.80
1.60
2.80
1.94
2.50
5.80
8.80
9.60

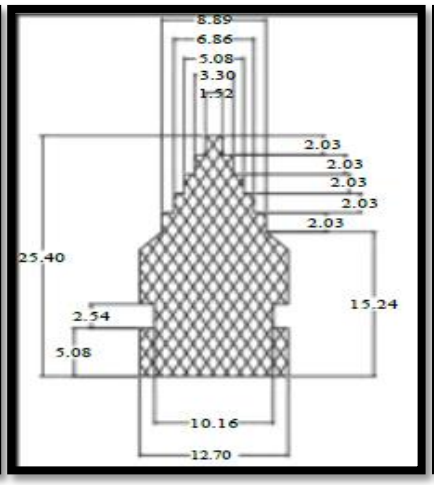
8.89
6.86
5.08
3.30
1.52
2.03
2.03
2.03
2.03
2.03
25.40
15.24
2.54
5.08
10.16
12.70

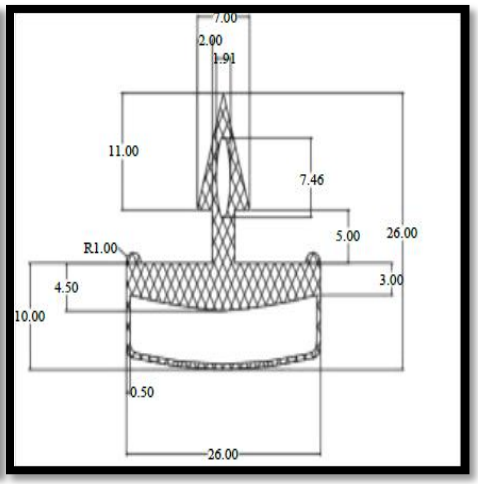
7.00
2.00
1.91
11.00
7.46
5.00
26.00
R1.00
4.50
3.00
10.00
0.50
26.00

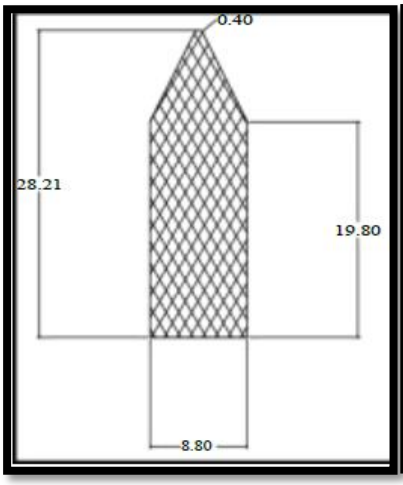
0.40
28.21
19.80
8.80

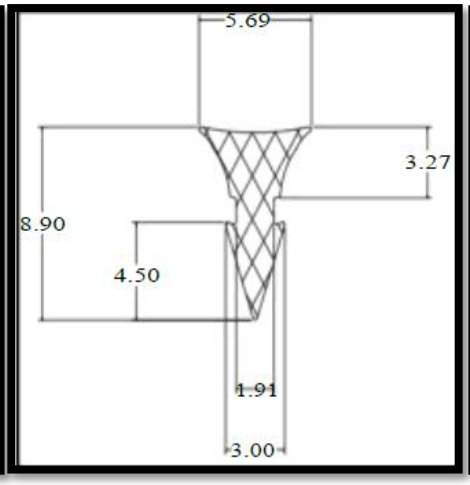
5.69
3.27
8.90
4.50
1.91
3.00

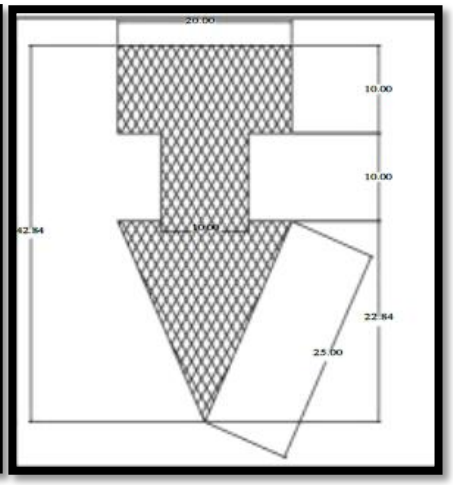
20.00
10.00
10.00
42.84
10.00
22.84
25.00

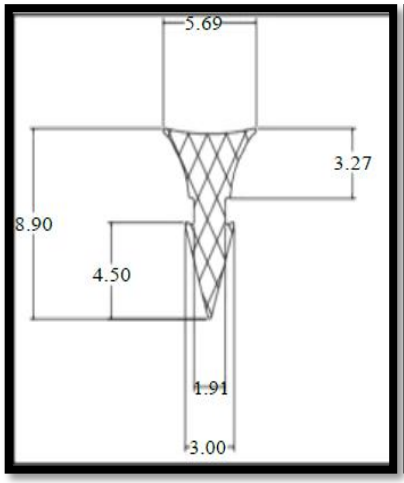
5.69
3.27
8.90
4.50
1.91
3.00

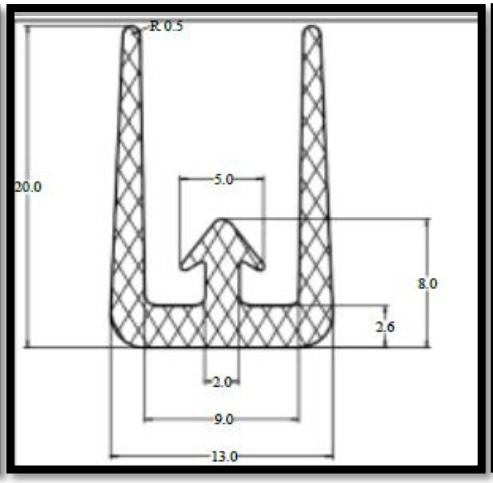
R 0.5
20.0
5.0
8.0
2.6
2.0
9.0
13.0

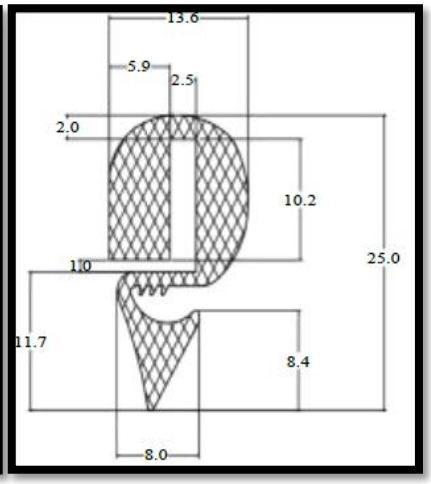
13.6
5.9
2.5
2.0
10.2
25.0
1.0
11.7
8.4
8.0

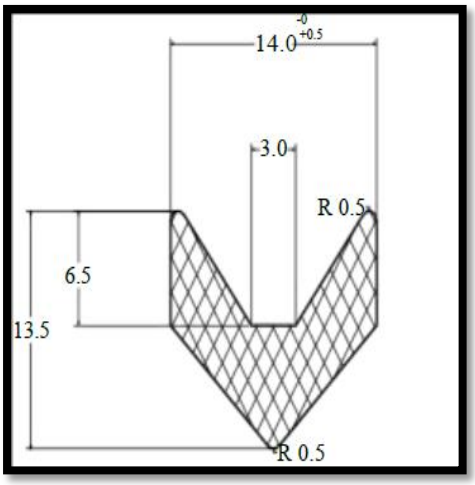
14.0 -0 +0.5
3.0
R 0.5
6.5
13.5
R 0.5

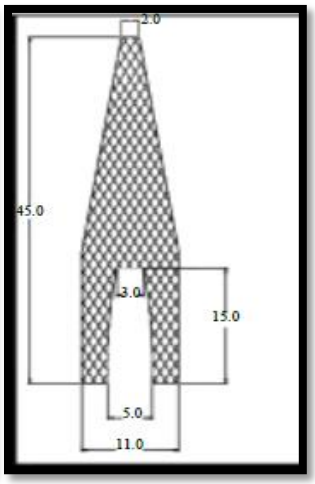
2.0
45.0
3.0
15.0
5.0
11.0

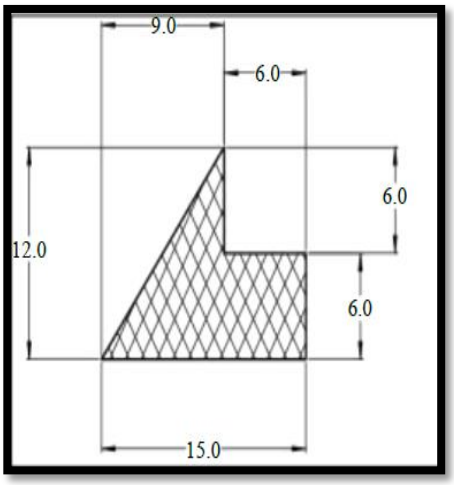
9.0
6.0
6.0
12.0
6.0
15.0

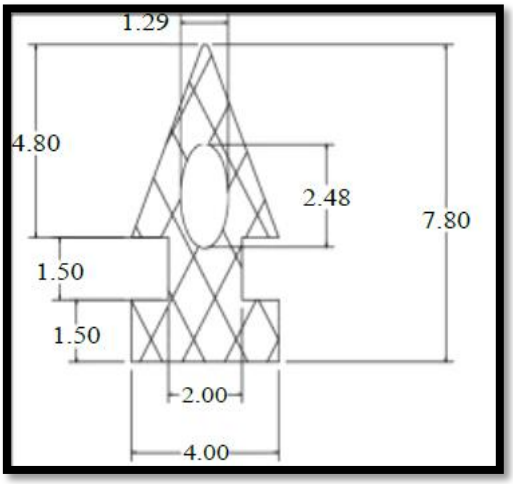
1.29
4.80
2.48
7.80
1.50
1.50
2.00
4.00

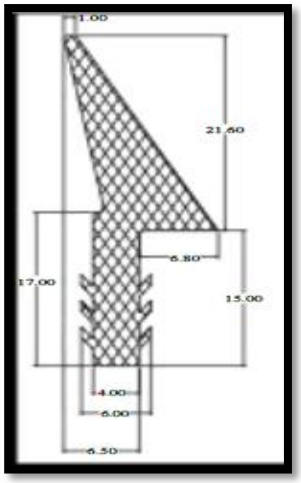
1.00
21.60
6.80
17.00
15.00
4.00
6.00
6.50

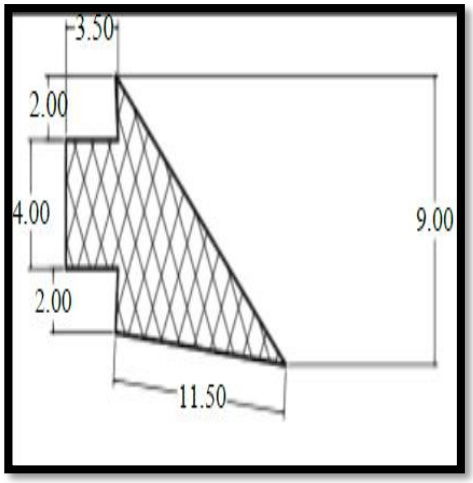
3.50
2.00
4.00
9.00
2.00
11.50

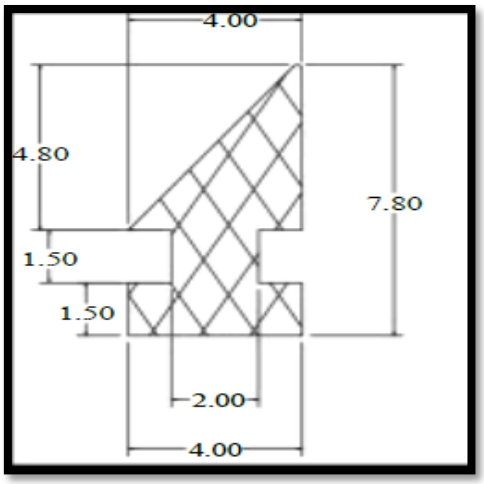
4.00
4.80
7.80
1.50
1.50
2.00
4.00

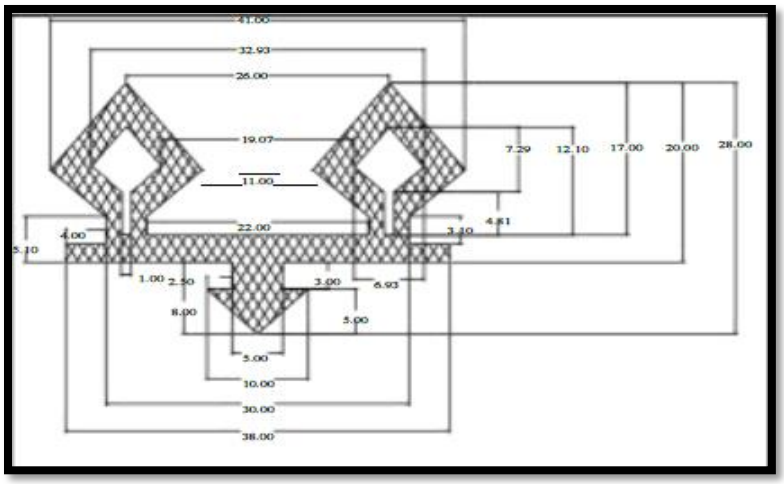
41.00
32.93
26.00
19.07
11.00
22.00
7.29
12.10
17.00
20.00
28.00
4.81
4.00
5.10
3.40
1.00
2.50
3.00
6.93
8.00
5.00
5.00
10.00
30.00
38.00

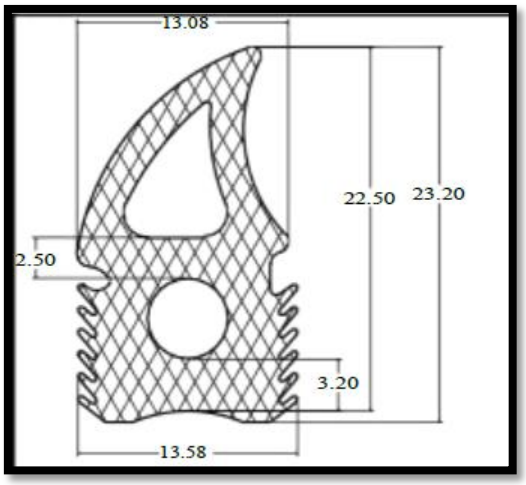
13.08
22.50
23.20
2.50
3.20
13.58

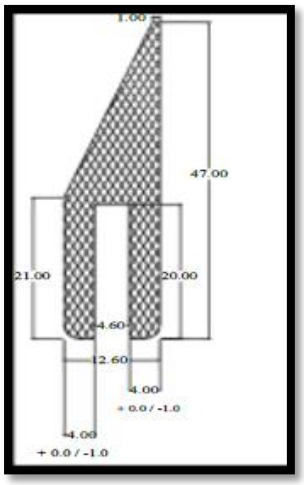
1.00
47.00
21.00
20.00
4.60
12.60
4.00
+ 0.0 / -1.0
4.00
+ 0.0 / -1.0

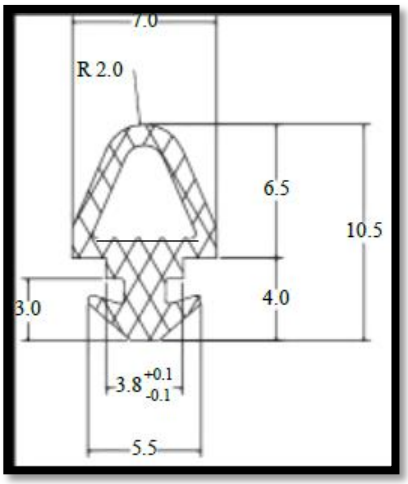
7.0
R 2.0
6.5
10.5
3.0
4.0
3.8 +0.1 -0.1
5.5

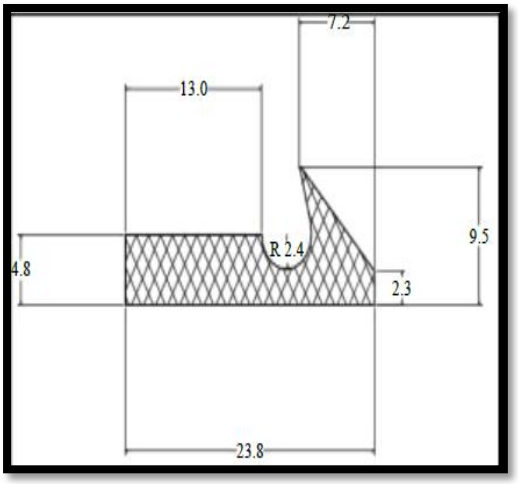
7.2
13.0
9.5
R 2.4
4.8
2.3
23.8

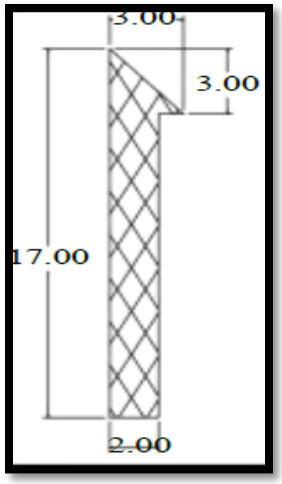
3.00
3.00
17.00
2.00

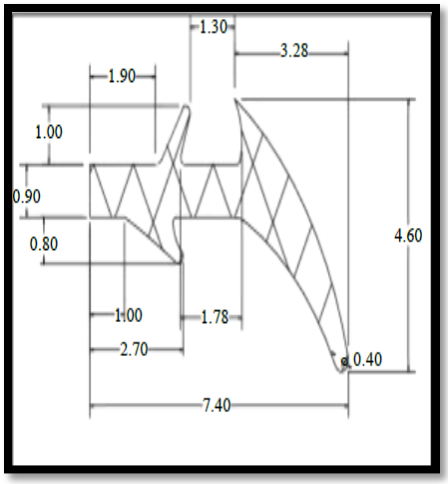
1.30
3.28
1.90
1.00
0.90
0.80
4.60
1.00
1.78
2.70
ø 0.40
7.40

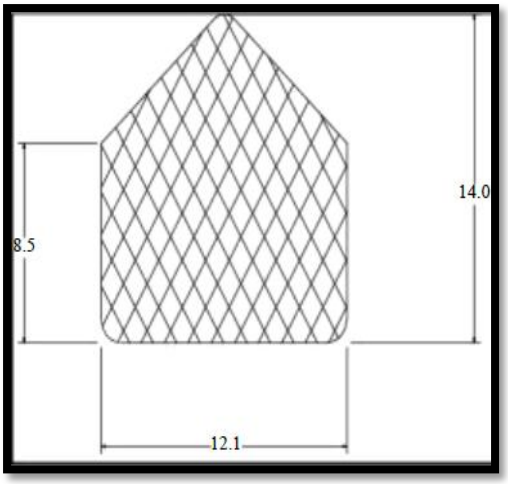
14.0
8.5
12.1

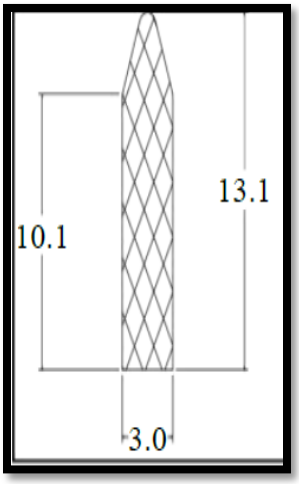
13.1
10.1
3.0

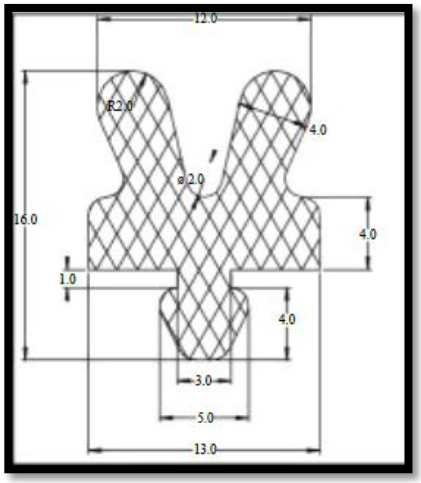
12.0
R2.0
4.0
ø 2.0
16.0
4.0
1.0
4.0
3.0
5.0
13.0

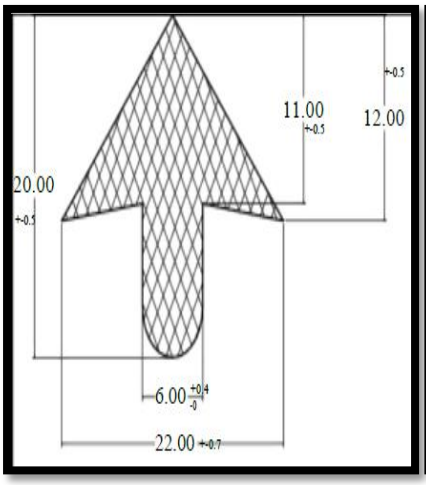
11.00
12.00
20.00
6.00
22.00

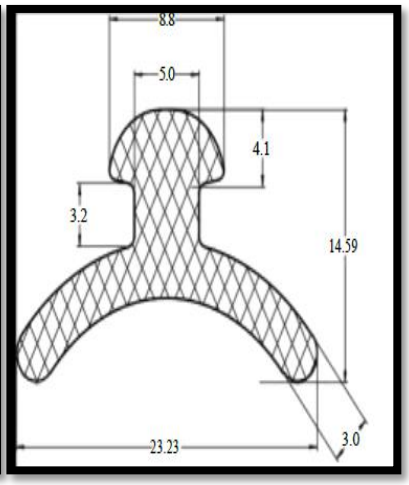
8.8
5.0
4.1
3.2
14.59
23.23
3.0

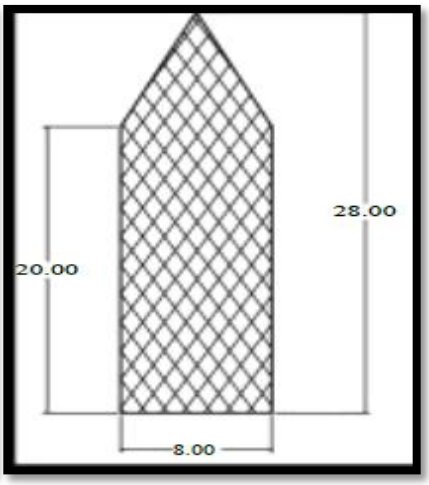
28.00
20.00
8.00

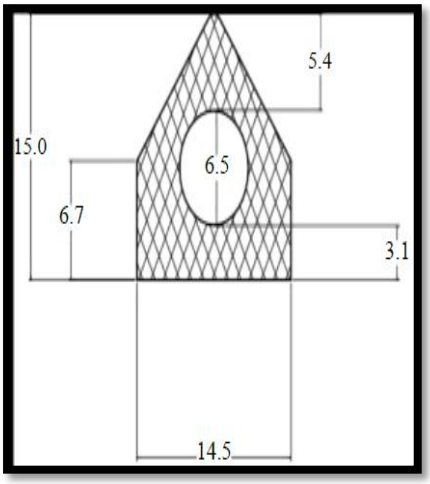
5.4
15.0
6.5
6.7
3.1
14.5

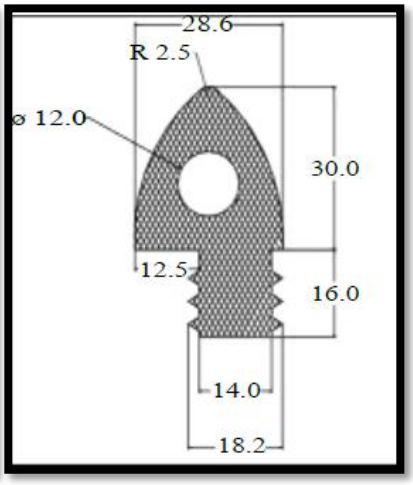
28.6
R 2.5
ø 12.0
30.0
12.5
16.0
14.0
18.2

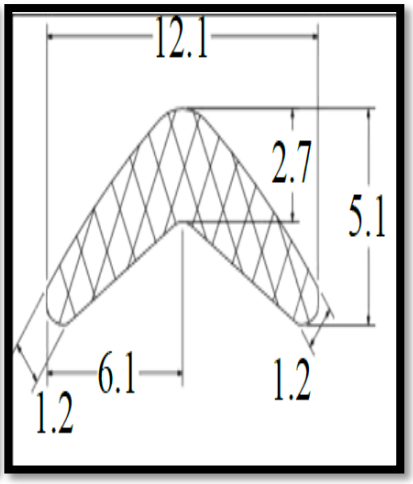
12.1
2.7
5.1
6.1
1.2
1.2

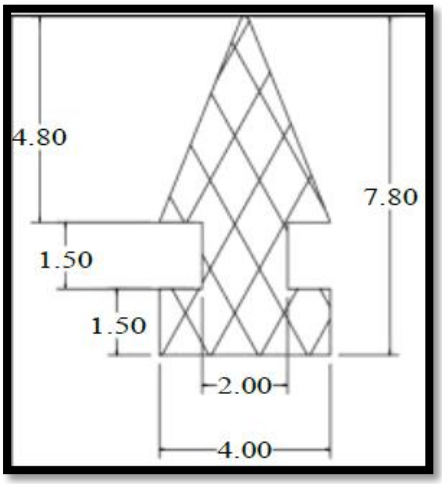
4.80
7.80
1.50
1.50
2.00
4.00

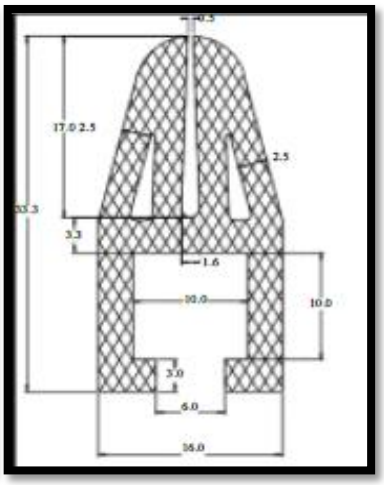

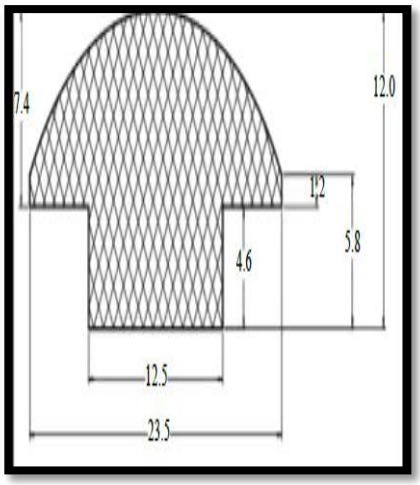
7.4
12.0
1.2
5.8
4.6
12.5
23.5

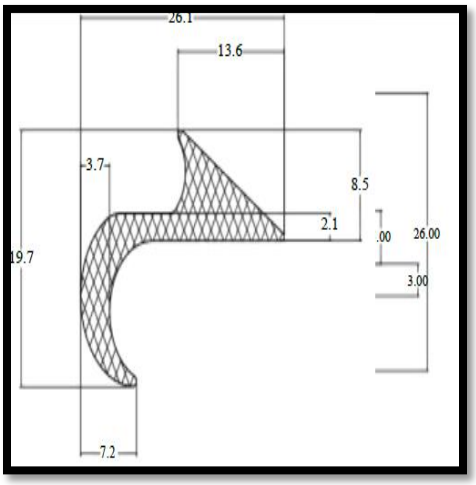
26.1
13.6
3.7
8.5
2.1
.00
26.00
19.7
3.00
7.2

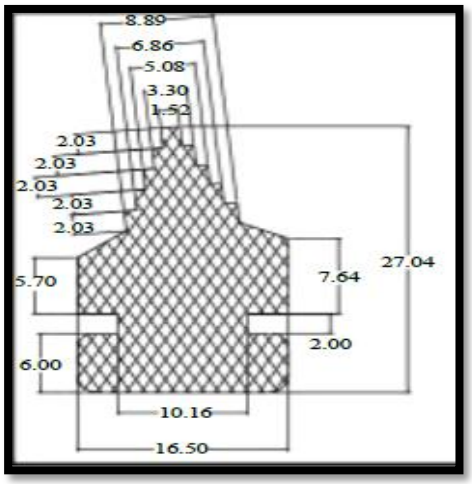
8.89
6.86
5.08
3.30
1.52
2.03
2.03
2.03
2.03
2.03
27.04
7.64
5.70
2.00
6.00
10.16
16.50

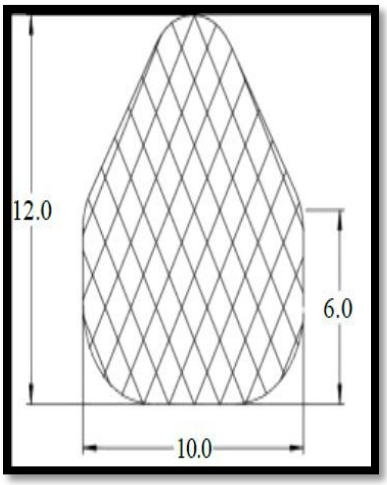
12.0
6.0
10.0

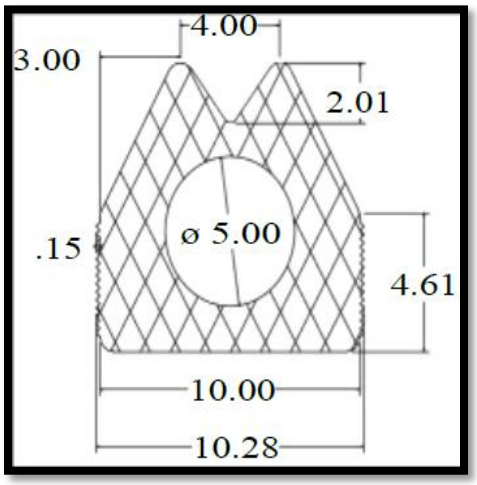
4.00
3.00
2.01
.15
ø 5.00
4.61
10.00
10.28

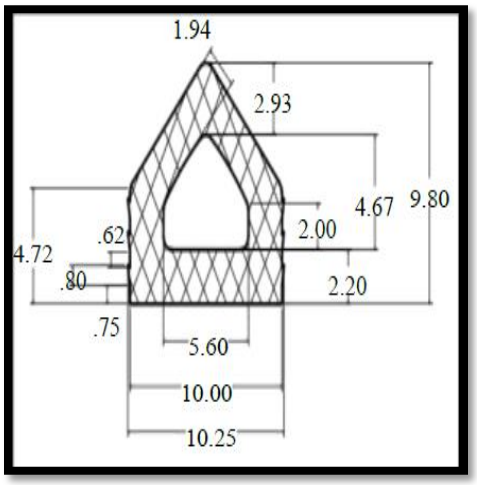
1.94
2.93
4.67
9.80
2.00
.62
4.72
.80
2.20
.75
5.60
10.00
10.25

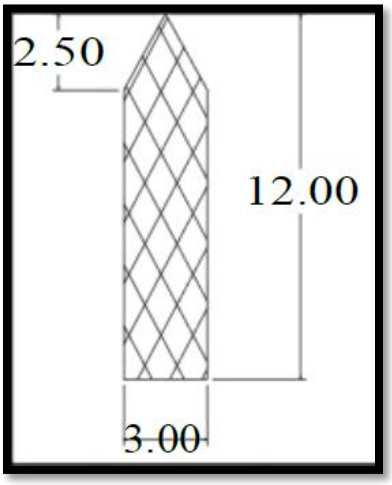
2.50
12.00
3.00

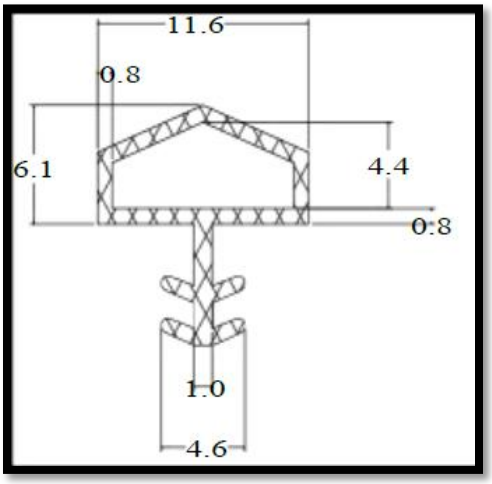
11.6
0.8
6.1
4.4
0.8
1.0
4.6

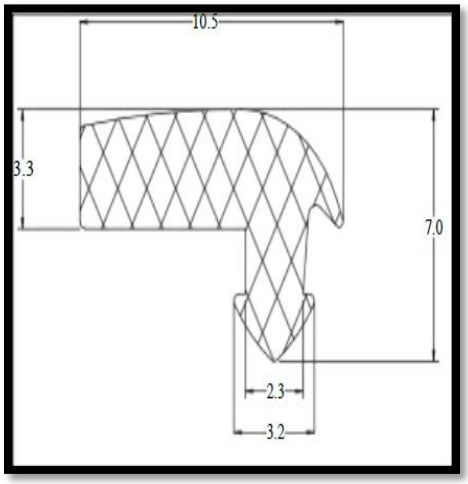
10.5
3.3
7.0
2.3
3.2

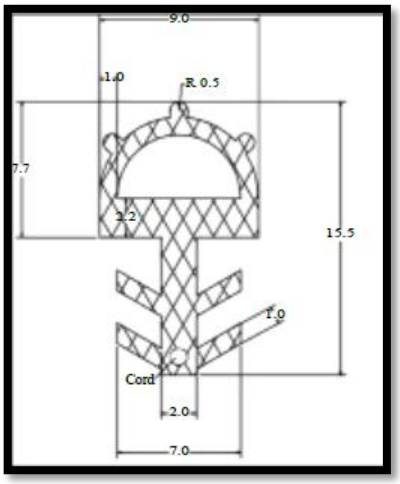
9.0
1.0
R 0.5
7.7
2.2
15.5
1.0
Cord
2.0
7.0

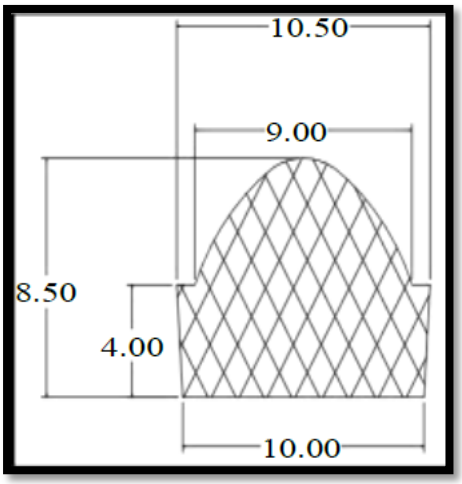
10.50
9.00
8.50
4.00
10.00

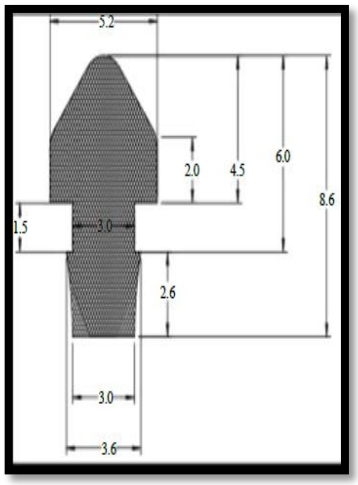
5.2
2.0
4.5
6.0
8.6
1.5
3.0
2.6
3.0
3.6

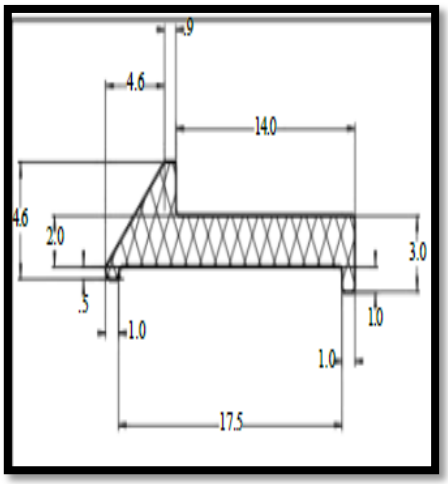
.9
4.6
14.0
4.6
2.0
3.0
.5
1.0
1.0
1.0
17.5

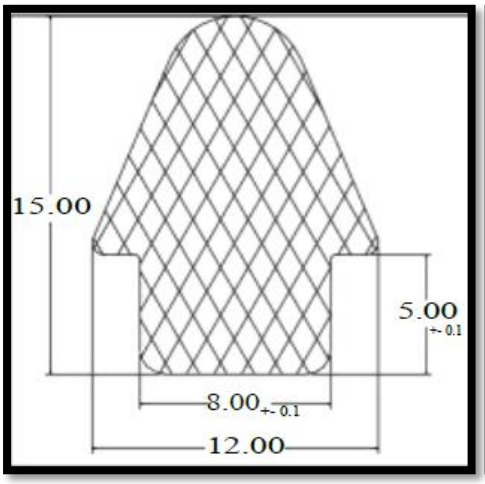
15.00
5.00
+- 0.1
8.00
+- 0.1
12.00

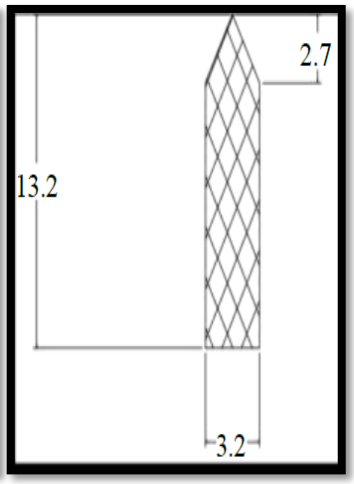
2.7
13.2
3.2

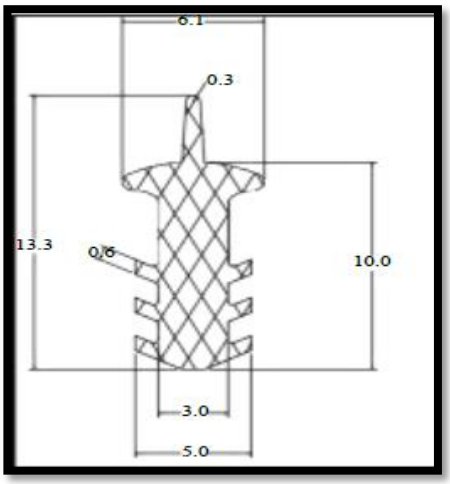
6.1
0.3
13.3
0.6
10.0
3.0
5.0

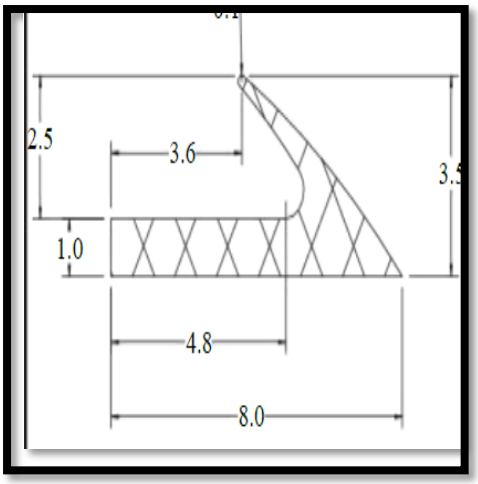
2.5
3.6
1.0
4.8
8.0

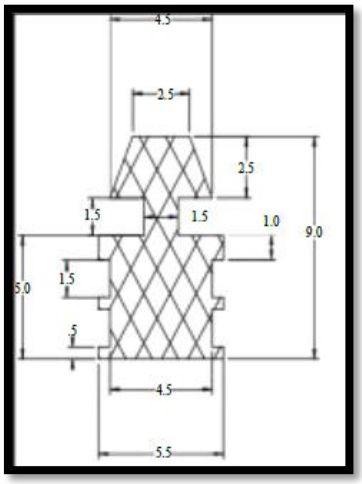
4.5
2.5
2.5
1.5
1.5
1.0
9.0
5.0
1.5
.5
4.5
5.5

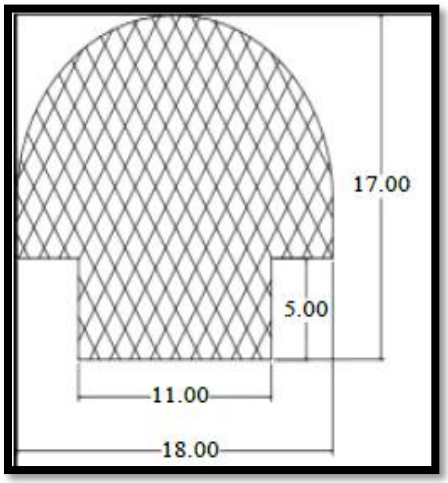
17.00
5.00
11.00
18.00

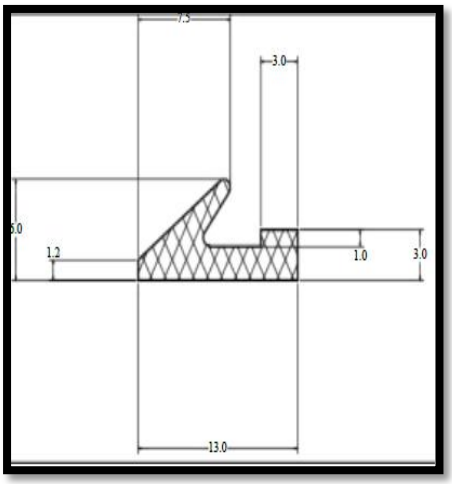
7.5
3.0
1.2
1.0
3.0
13.0

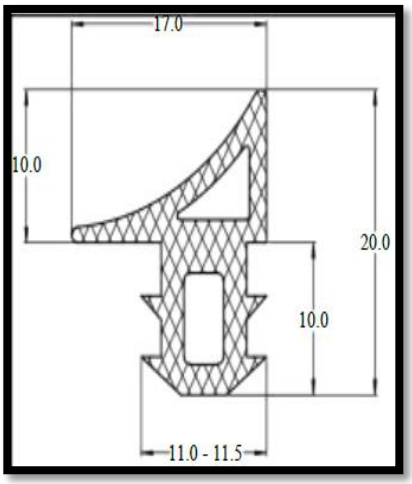
17.0
10.0
20.0
10.0
11.0 - 11.5

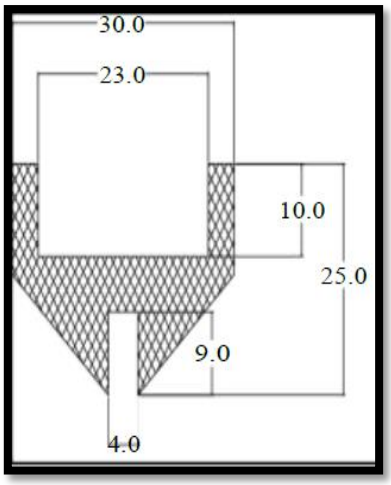
30.0
23.0
10.0
25.0
9.0
4.0

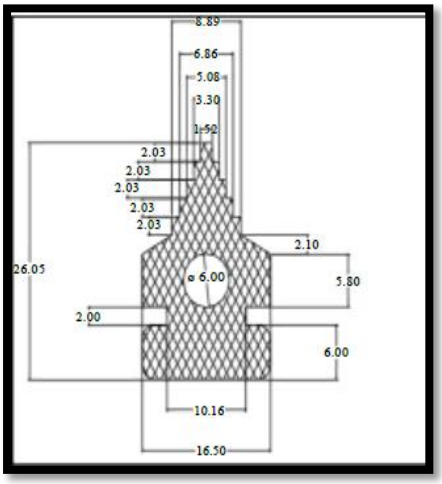
8.89
6.86
5.08
3.30
1.52
2.03
2.03
2.03
2.03
2.03
2.10
26.05
ø 6.00
5.80
2.00
6.00
10.16
16.50

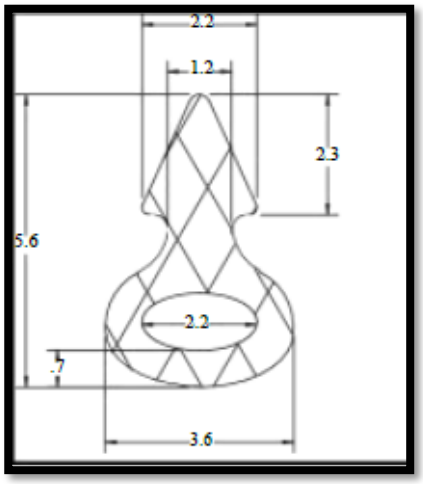
2.2
1.2
2.3
5.6
2.2
.7
3.6

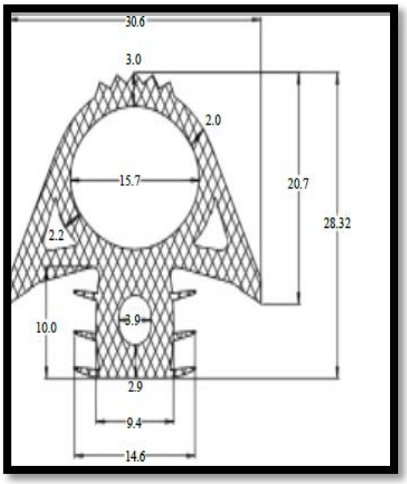
30.6
3.0
2.0
15.7
20.7
28.32
2.2
10.0
3.9
2.9
9.4
14.6

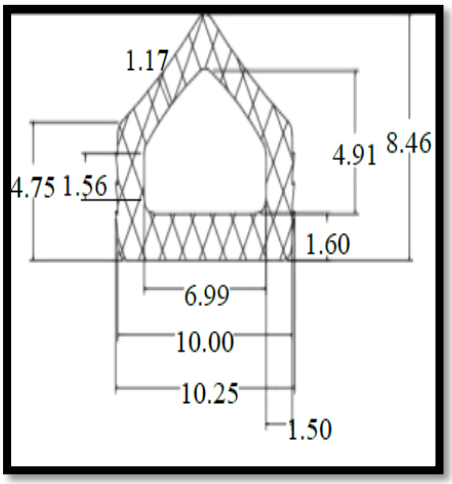
1.17
4.91
8.46
4.75
1.56
1.60
6.99
10.00
10.25
1.50

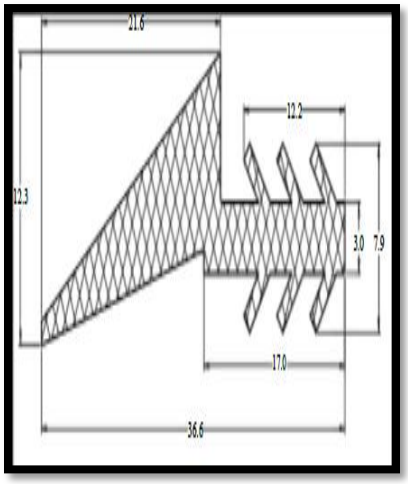
21.6
12.2
12.3
3.0
7.9
17.0
36.6

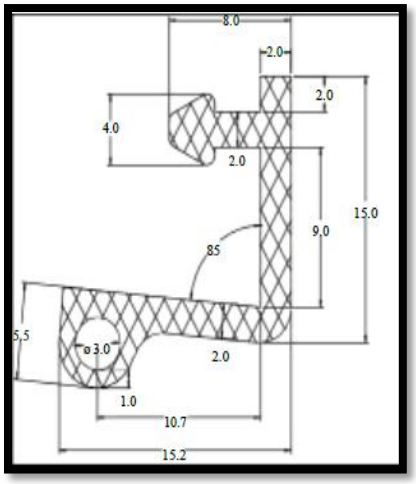
8.0
2.0
2.0
4.0
2.0
15.0
9.0
8.5
5.5
ø 3.0
2.0
1.0
10.7
15.2

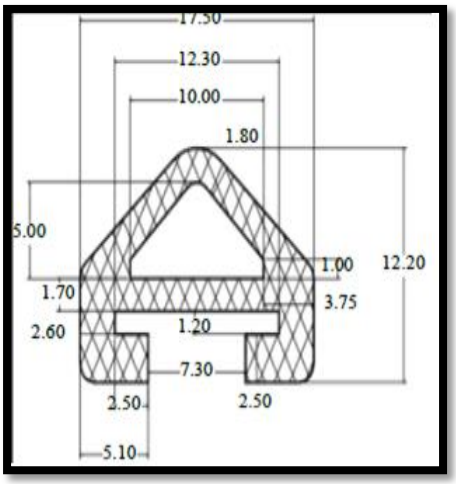
17.50
12.30
10.00
1.80
5.00
1.00
12.20
1.70
3.75
2.60
1.20
7.30
2.50
2.50
5.10

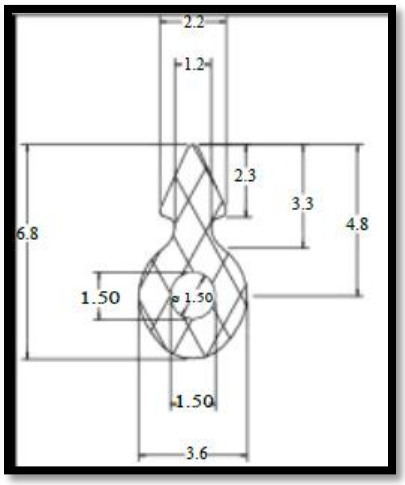
2.2
1.2
2.3
3.3
4.8
6.8
1.50
ø 1.50
1.50
3.6

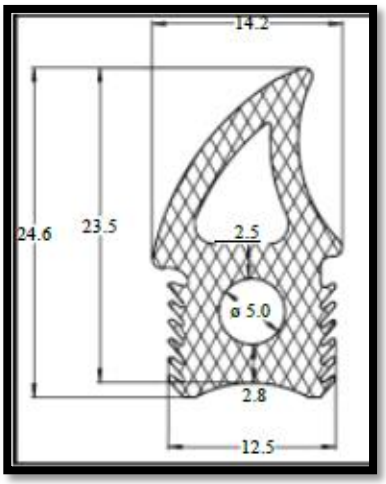
14.2
24.6
23.5
2.5
ø 5.0
2.8
12.5

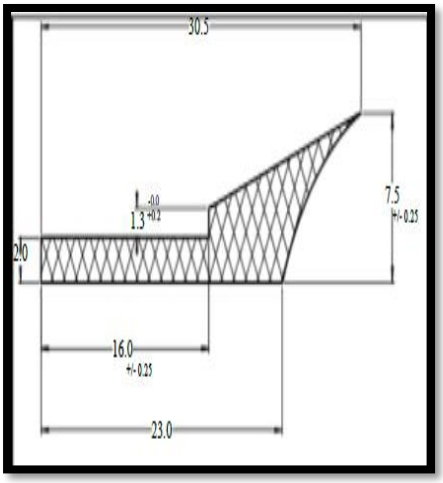
30.5
7.5
+/- 0.25
1.3
2.0
16.0
+/- 0.25
23.0

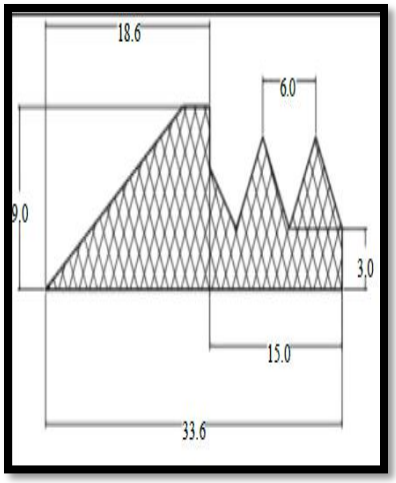
18.6
6.0
9.0
3.0
15.0
33.6

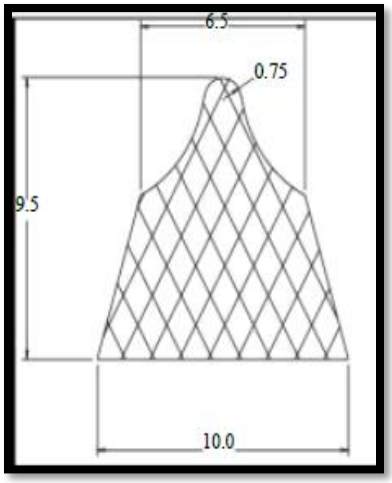
6.5
0.75
9.5
10.0

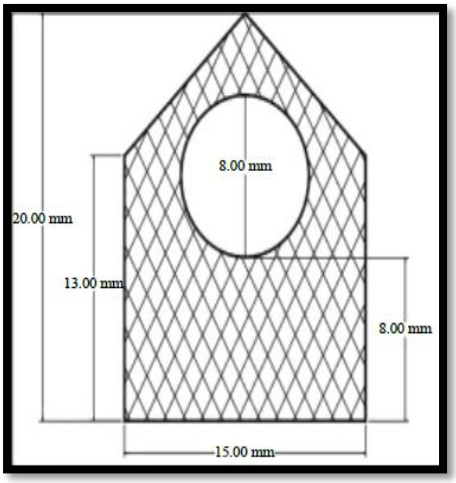
8.00 mm
20.00 mm
13.00 mm
8.00 mm
15.00 mm

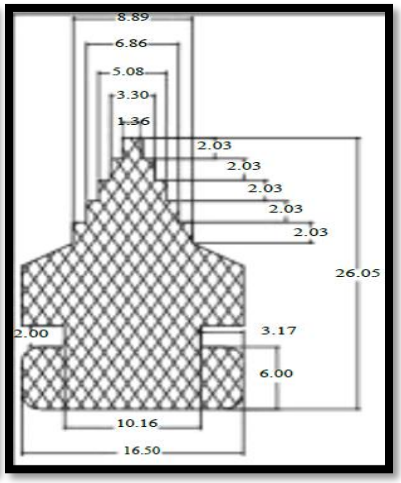
8.89
6.86
5.08
3.30
1.36
2.03
2.03
2.03
2.03
2.03
26.05
2.00
3.17
6.00
10.16
16.50

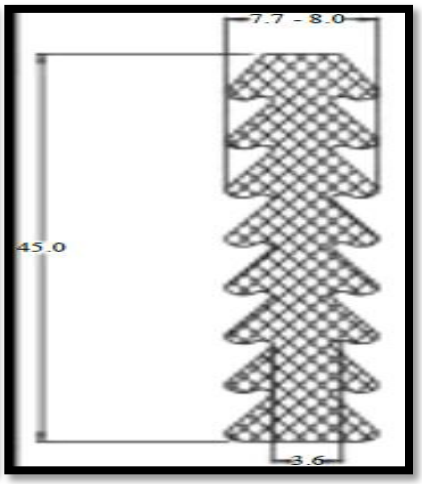
7.7 - 8.0
45.0
3.6

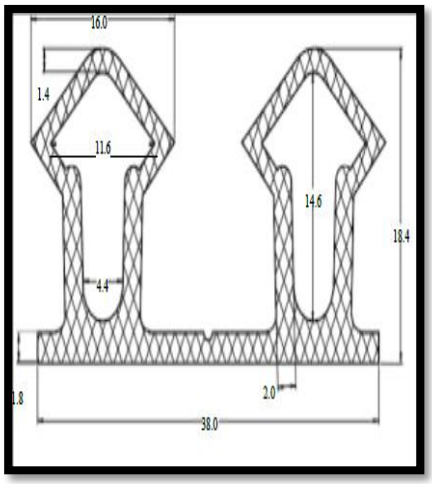
16.0
1.4
11.6
14.6
18.4
4.4
1.8
2.0
38.0

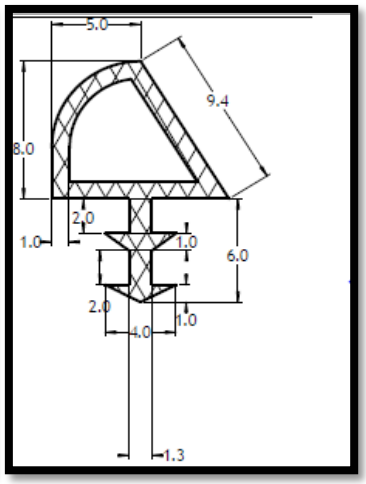
5.0
9.4
8.0
2.0
1.0
1.0
6.0
2.0
1.0
4.0
1.3

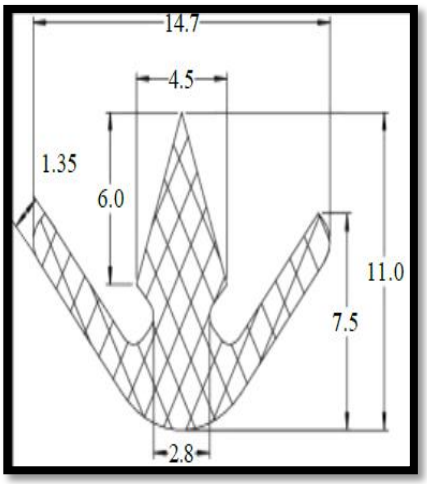
14.7
4.5
1.35
6.0
11.0
7.5
2.8

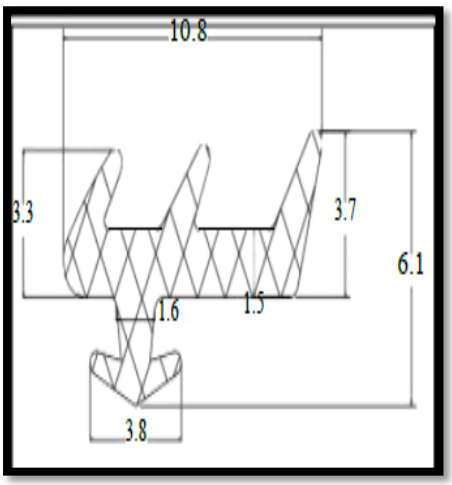
10.8
3.3
3.7
6.1
1.6
1.5
3.8

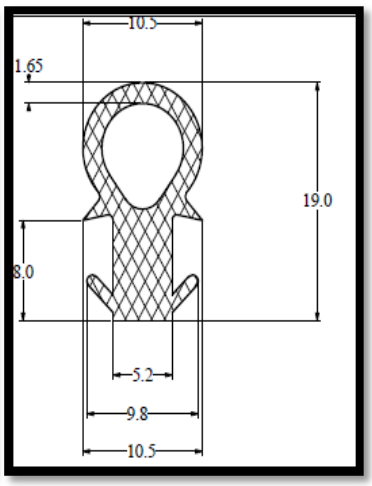
10.5
1.65
19.0
8.0
5.2
9.8
10.5

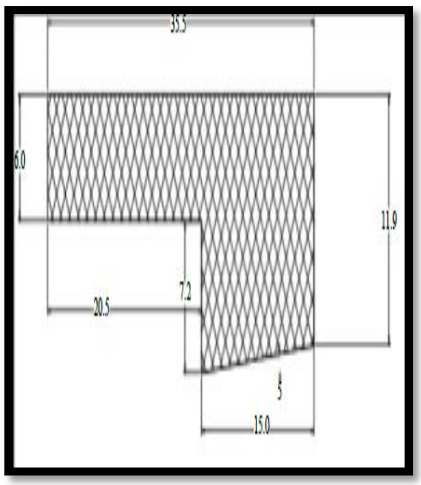
35.5
6.0
11.9
20.5
7.2
5
15.0

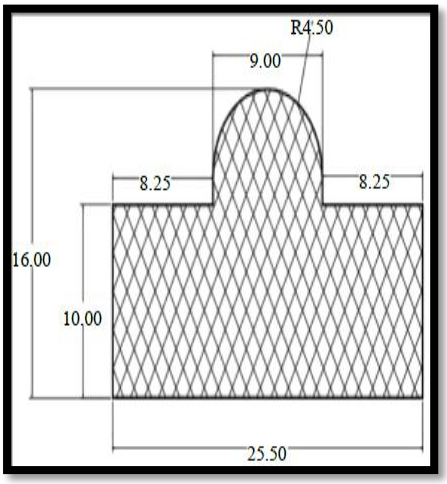
R4.50
9.00
8.25
8.25
16.00
10.00
25.50

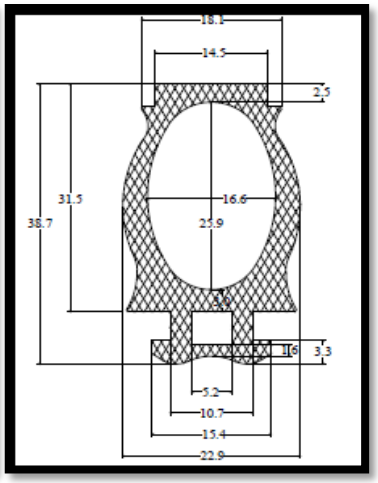
18.1
14.5
2.5
31.5
16.6
38.7
25.9
1.6
3.3
5.2
10.7
15.4
22.9

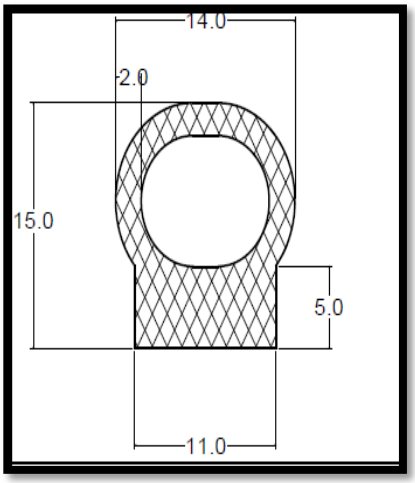
14.0
2.0
15.0
5.0
11.0

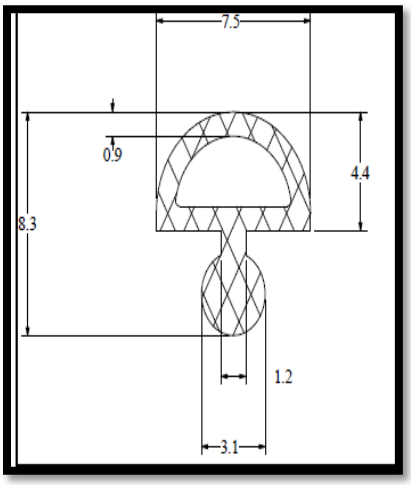
7.5
0.9
4.4
8.3
1.2
3.1

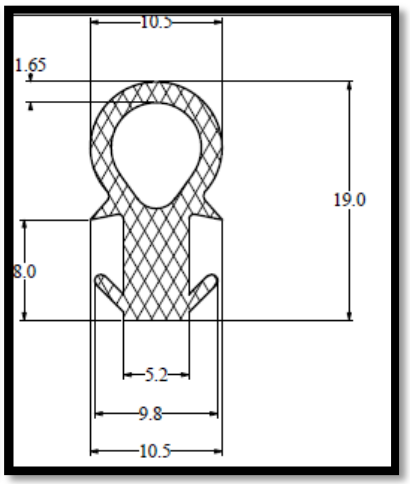
10.5
1.65
19.0
8.0
5.2
9.8
10.5

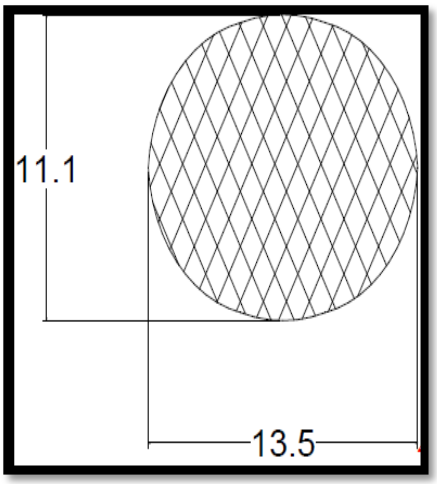
11.1
13.5

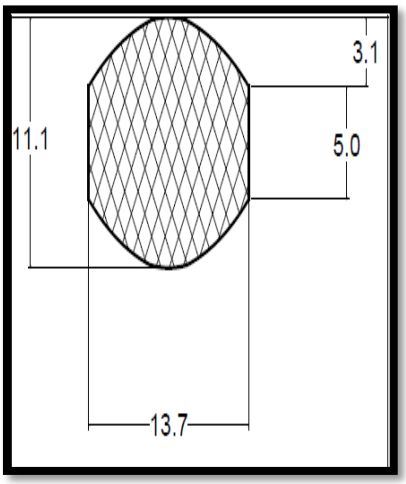
3.1
11.1
5.0
13.7

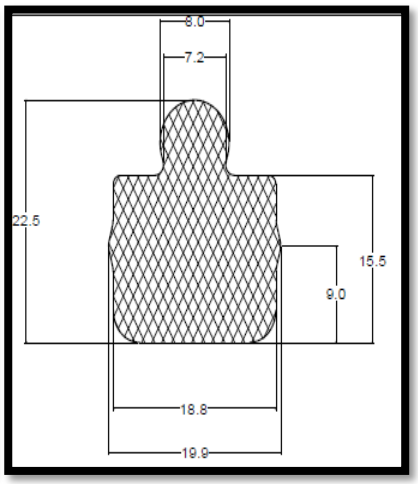
8.0
7.2
22.5
15.5
9.0
18.8
19.9

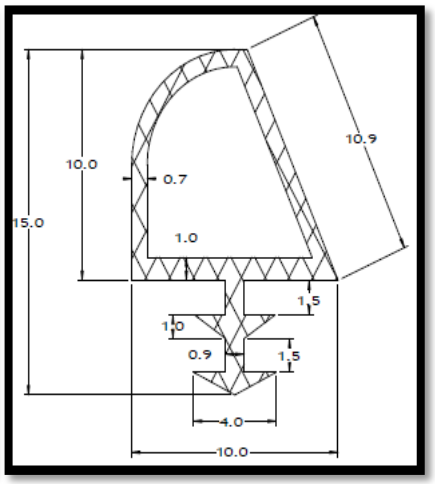
10.9
10.0
0.7
15.0
1.0
1.5
1.0
0.9
1.5
4.0
10.0

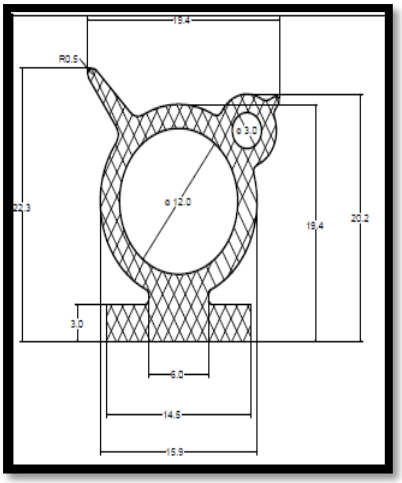
15.4
R0.5
ø 3.0
ø 12.0
22.3
19.4
20.2
3.0
6.0
14.5
15.9

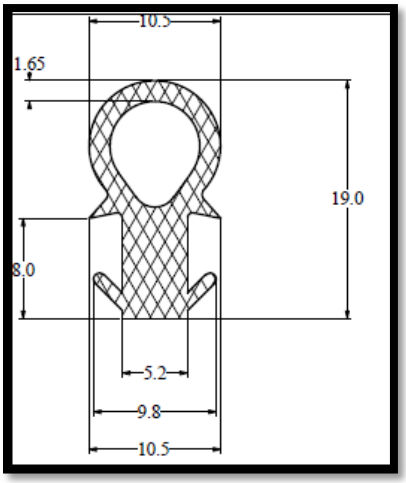
10.5
1.65
19.0
8.0
5.2
9.8
10.5

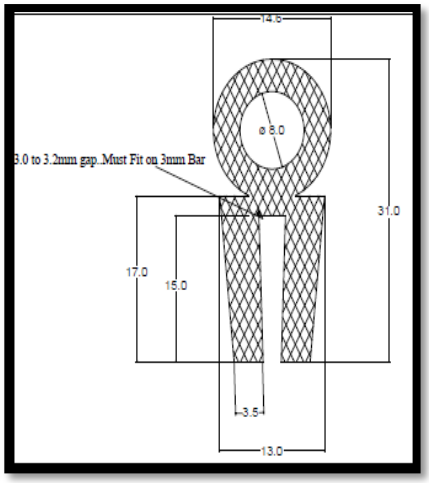
14.8
ø 8.0
3.0 to 3.2mm gap .Must Fit on 3mm Bar
31.0
17.0
15.0
3.5
13.0

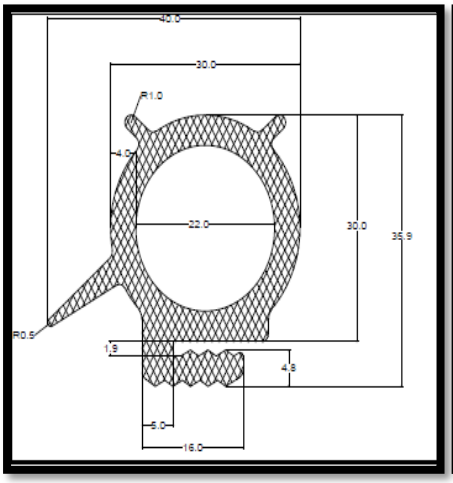
40.5
30.0
R1.0
4.0
22.0
30.0
35.9
R0.5
1.9
4.5
6.0
16.0

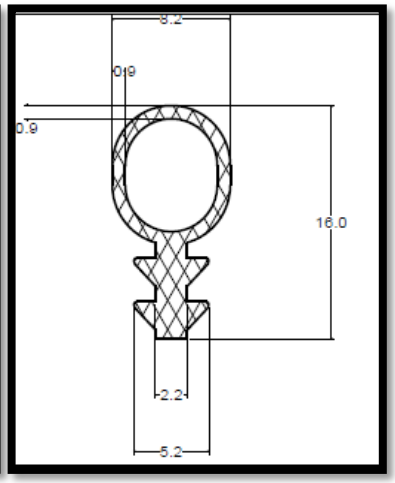
8.2
0.9
0.9
16.0
2.2
5.2

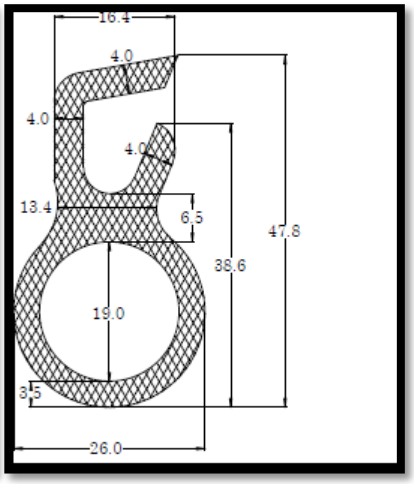
16.4
4.0
4.0
4.0
13.4
6.5
47.8
38.6
19.0
3.5
26.0

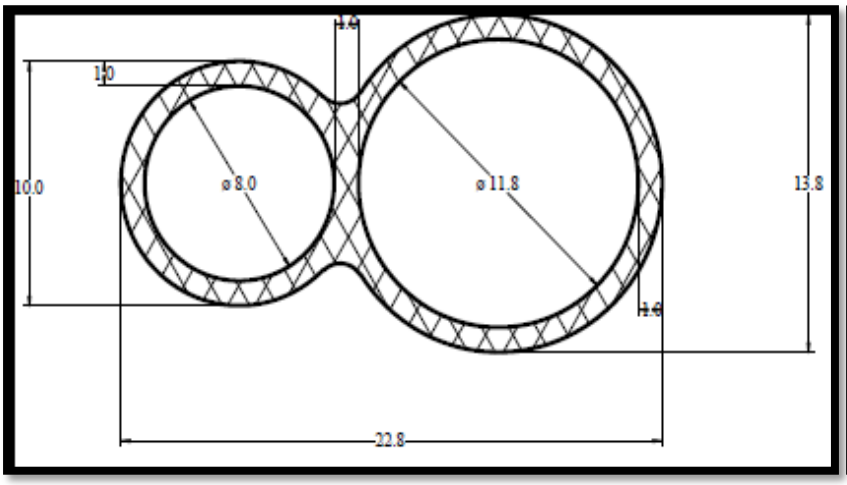
1.0
1.0
10.0
ø 8.0
ø 11.8
13.8
1.0
22.8

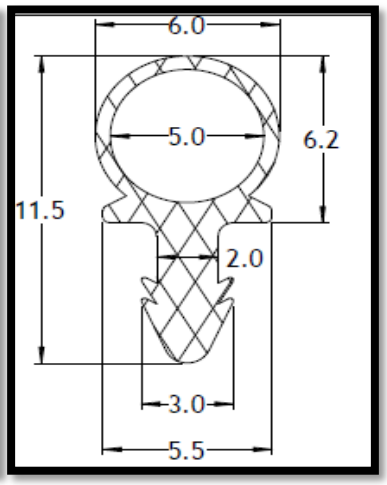
6.0
5.0
6.2
11.5
2.0
3.0
5.5

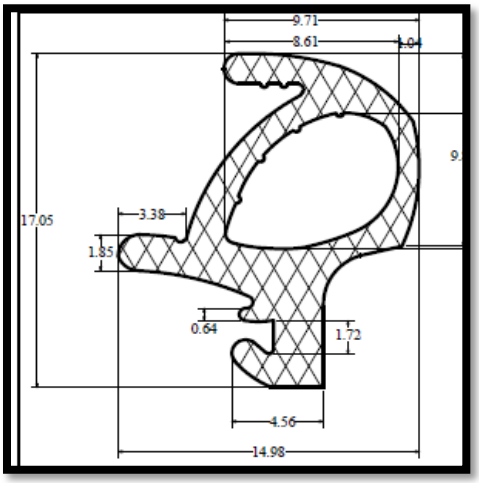
9.71
8.61
1.04
17.05
3.38
1.85
0.64
1.72
4.56
14.98

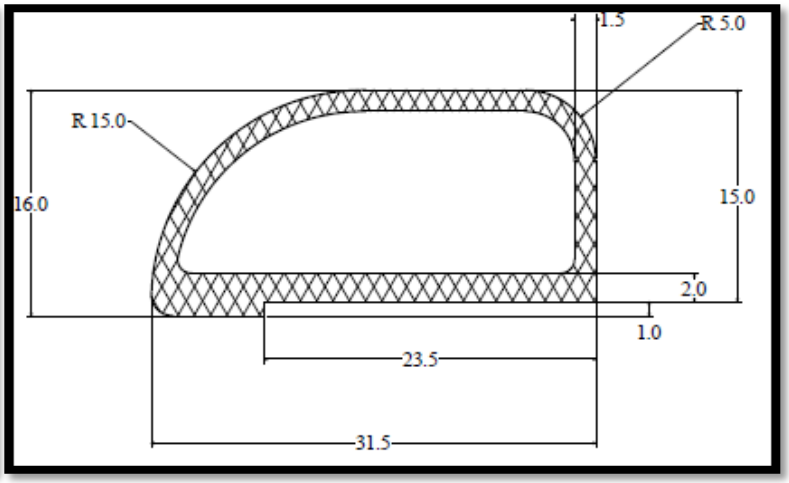
1.5
R 5.0
R 15.0
16.0
15.0
2.0
1.0
23.5
31.5

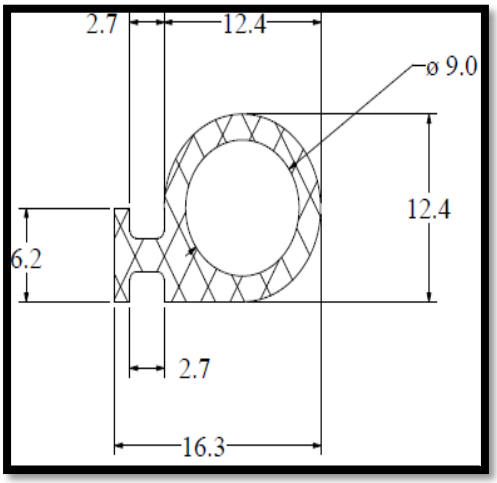
2.7
12.4
ø 9.0
12.4
6.2
2.7
16.3

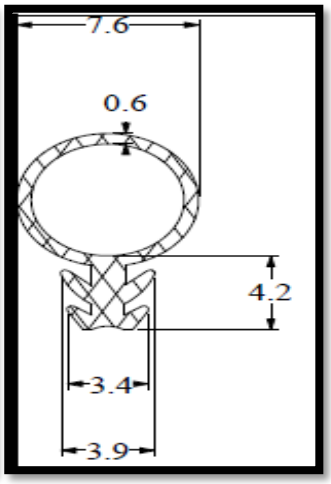
7.6
0.6
4.2
3.4
3.9

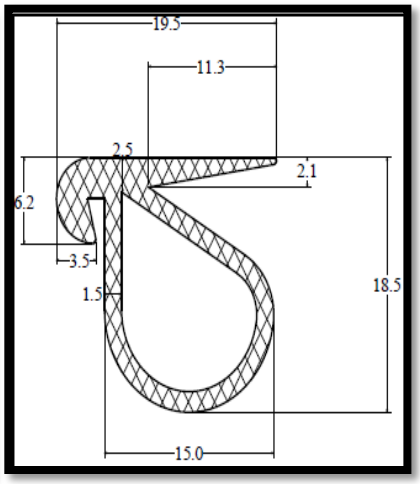
19.5
11.3
2.5
2.1
6.2
3.5
1.5
18.5
15.0

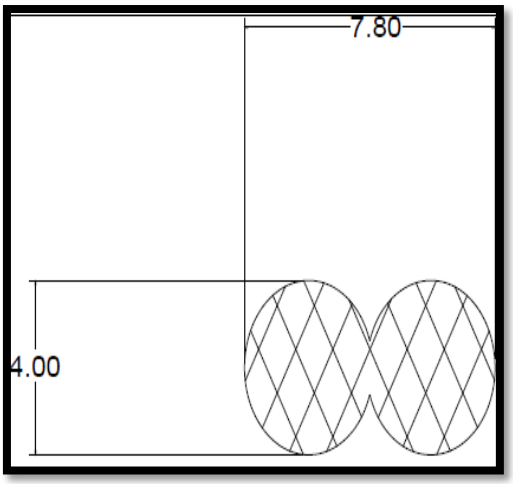
7.80
4.00

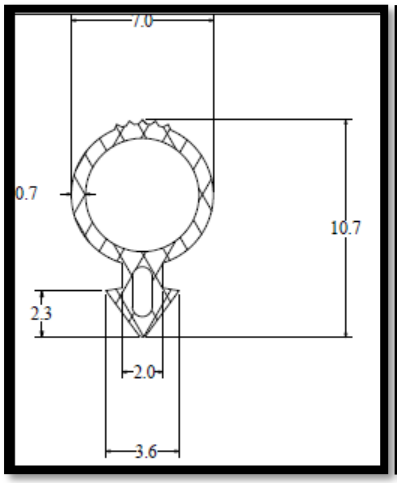
7.0
0.7
10.7
2.3
2.0
3.6

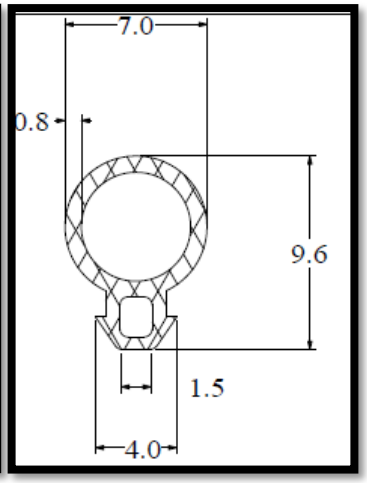
7.0
0.8
9.6
1.5
4.0

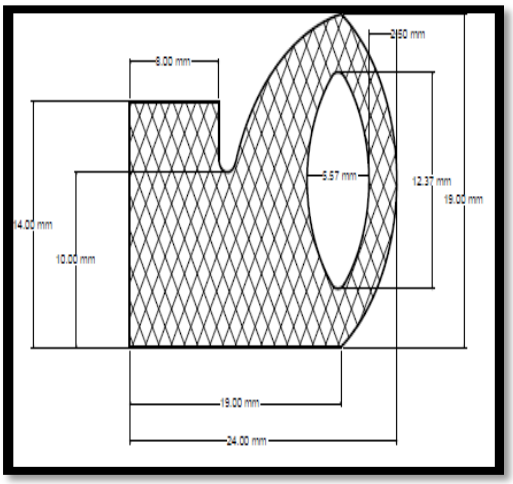
8.00 mm
2.50 mm
3.57 mm
12.37 mm
19.00 mm
14.00 mm
10.00 mm
19.00 mm
24.00 mm

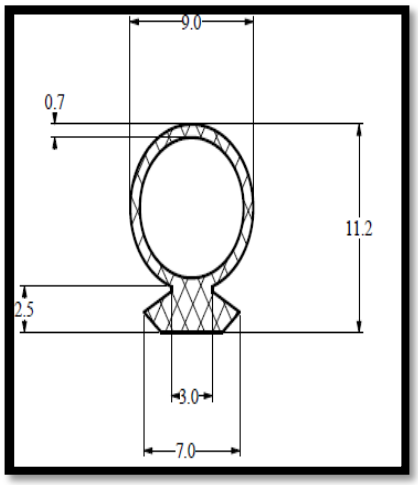
9.0
0.7
11.2
2.5
3.0
7.0

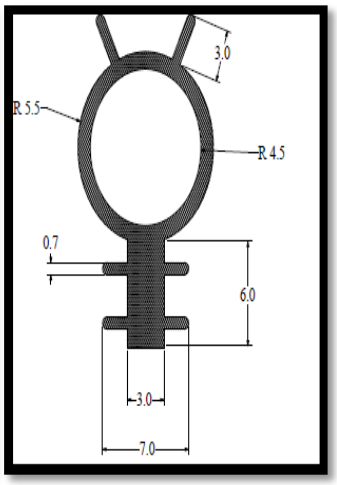
3.0
R 5.5
R 4.5
0.7
6.0
3.0
7.0

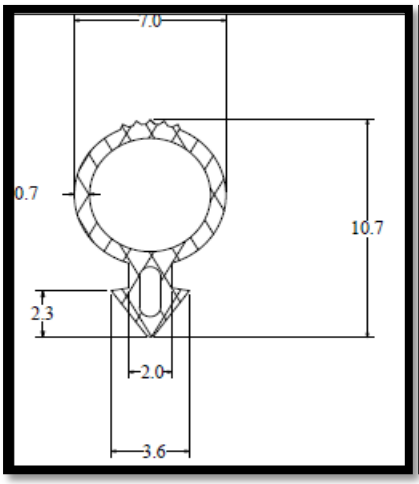
7.0
0.7
10.7
2.3
2.0
3.6

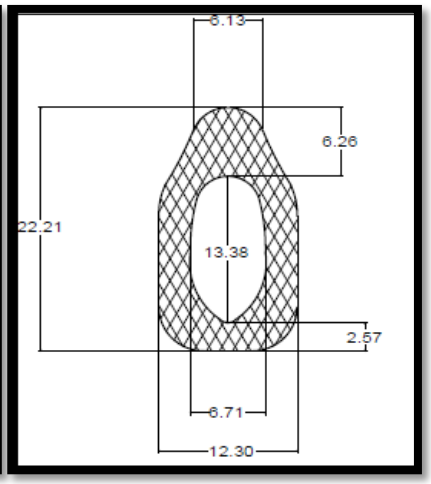
8.13
6.26
22.21
13.38
2.57
6.71
12.30

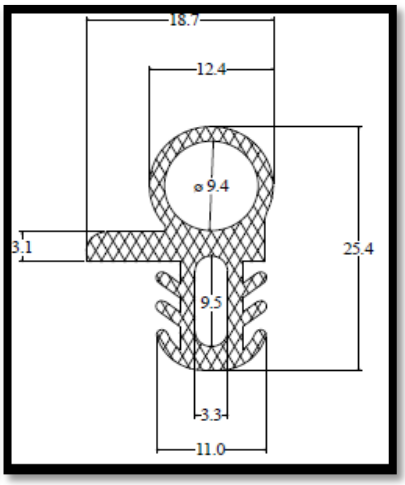
18.7
12.4
ø 9.4
3.1
25.4
9.5
3.3
11.0

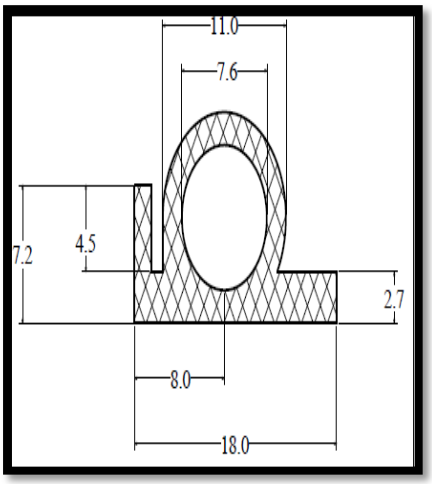
11.0
7.6
7.2
4.5
2.7
8.0
18.0

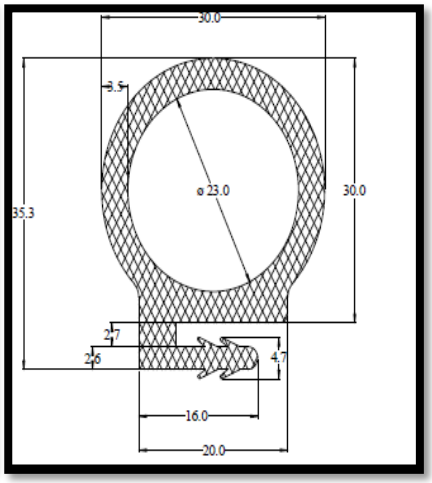
30.0
8.5
ø 23.0
35.3
30.0
2.7
2.6
4.7
16.0
20.0

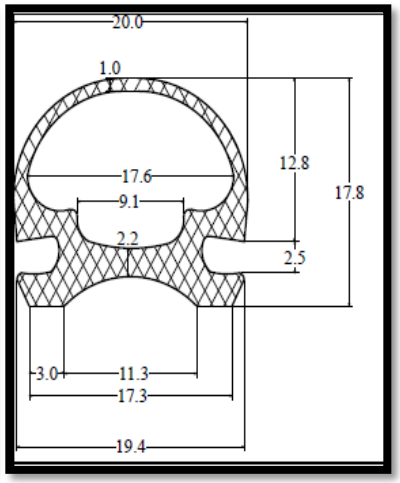
20.0
1.0
12.8
17.6
17.8
9.1
2.2
2.5
3.0
11.3
17.3
19.4

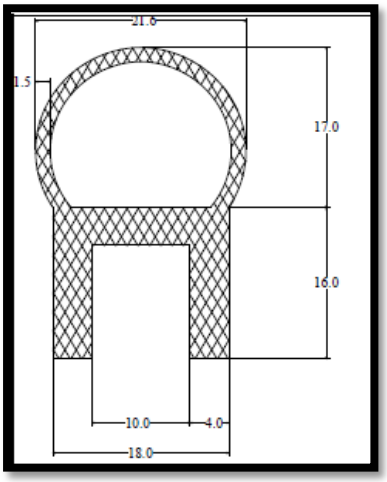
21.6
1.5
17.0
16.0
10.0
4.0
18.0

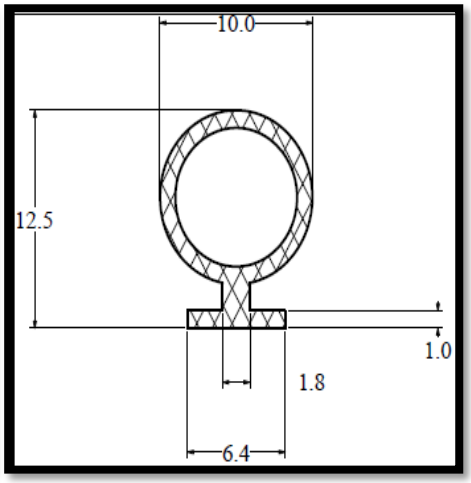
10.0
12.5
1.0
1.8
6.4

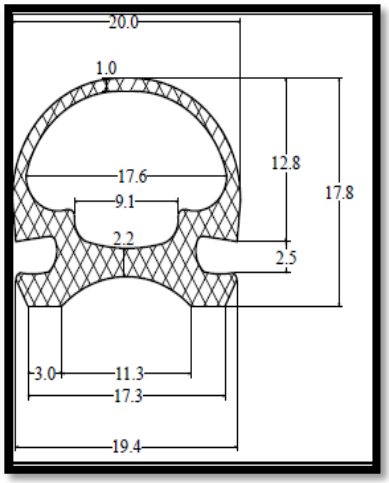
20.0
1.0
12.8
17.6
17.8
9.1
2.2
2.5
3.0
11.3
17.3
19.4

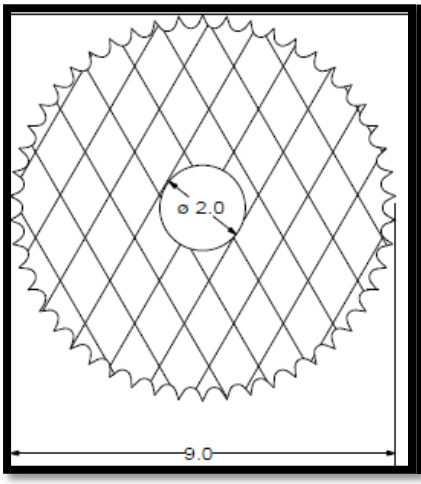
ø 2.0
9.0

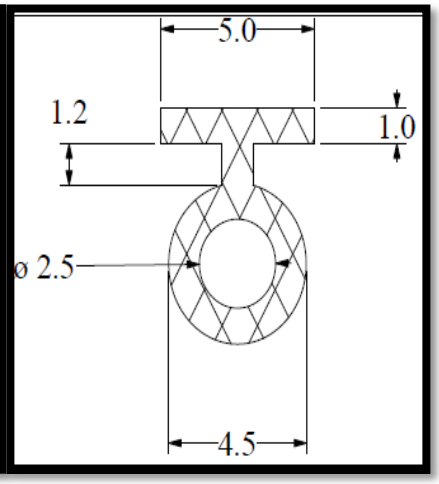
5.0
1.2
1.0
ø 2.5
4.5

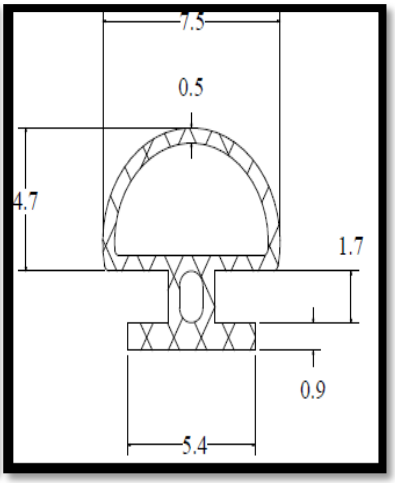
7.5
0.5
4.7
1.7
0.9
5.4

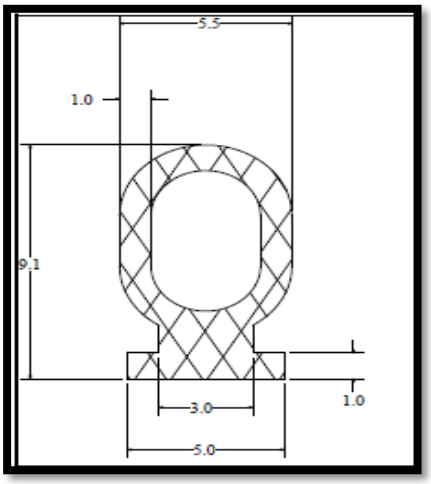
5.5
1.0
9.1
3.0
1.0
5.0

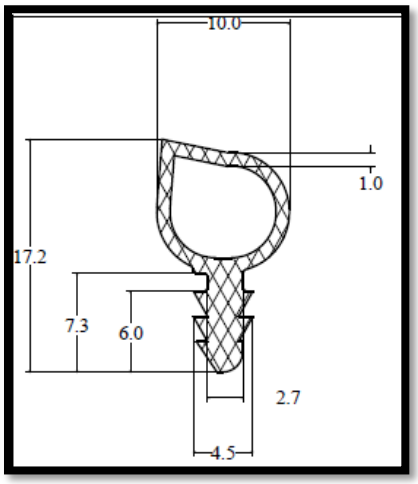
10.0
1.0
17.2
7.3
6.0
2.7
4.5

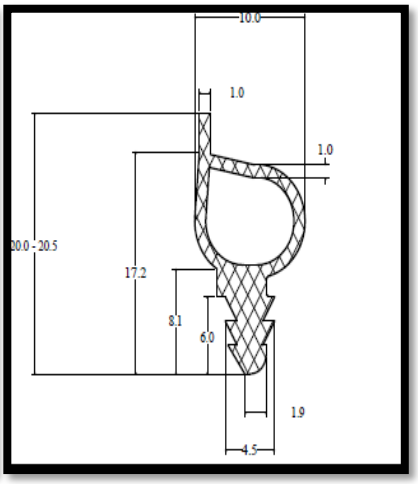
10.0
1.0
1.0
20.0 - 20.5
17.2
8.1
6.0
1.9
4.5

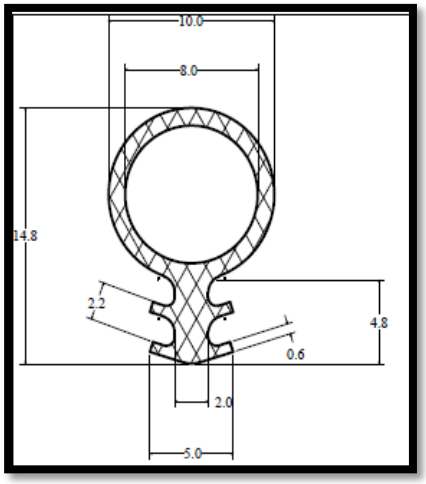
10.0
8.0
14.8
2.2
4.8
0.6
2.0
5.0

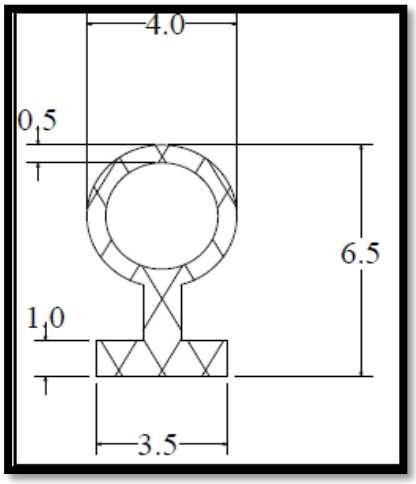
4.0
0.5
6.5
1.0
3.5

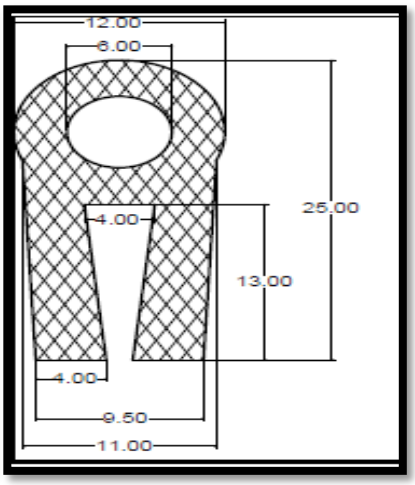
12.00
6.00
25.00
4.00
13.00
4.00
9.50
11.00

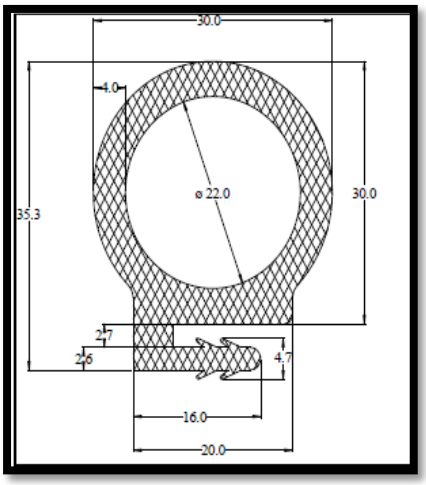
30.0
4.0
ø 22.0
30.0
35.3
2.7
2.6
4.7
16.0
20.0

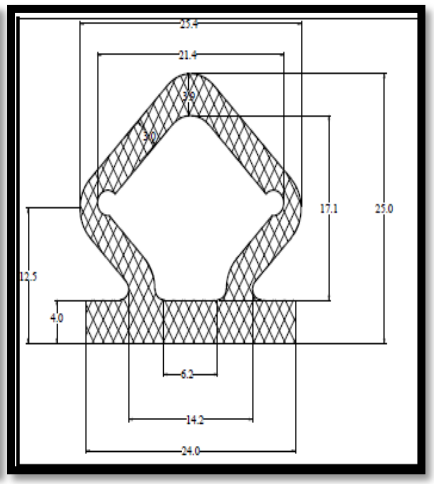
23.4
21.4
3.9
3.0
17.1
25.0
12.5
4.0
8.2
14.2
24.0

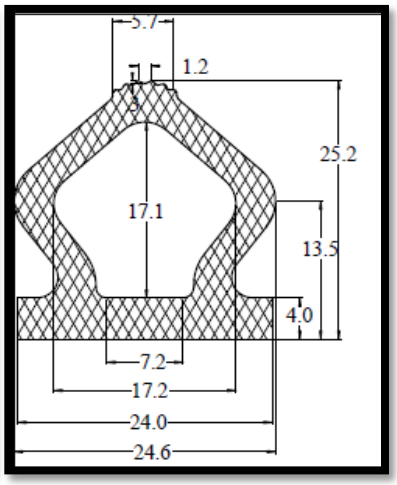
5.7
1.2
25.2
17.1
13.5
4.0
7.2
17.2
24.0
24.6

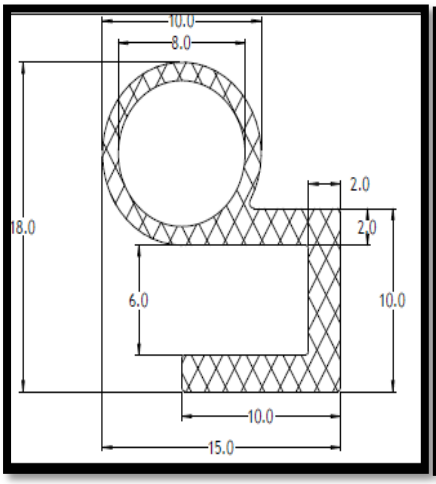
10.0
8.0
2.0
18.0
2.0
6.0
10.0
10.0
15.0

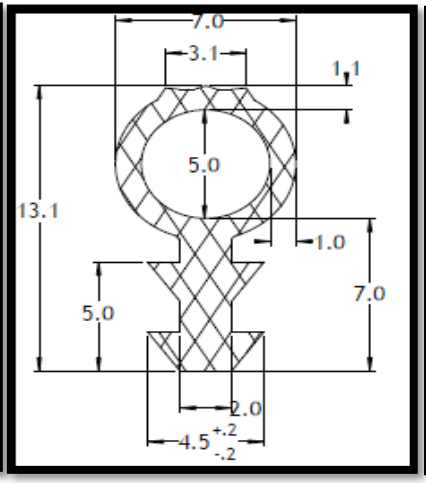
7.0
3.1
1.1
5.0
13.1
1.0
7.0
5.0
2.0
4.5 +.2 -.2

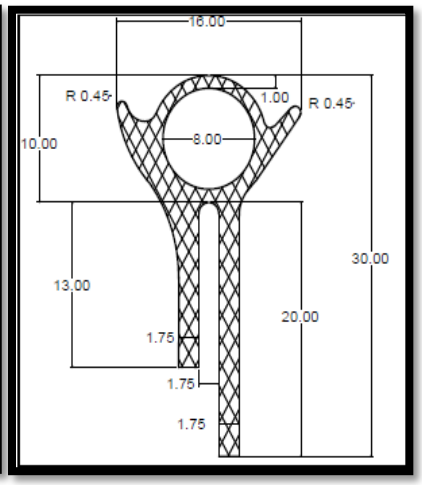
16.00
R 0.45
1.00
R 0.45
10.00
8.00
30.00
13.00
20.00
1.75
1.75
1.75

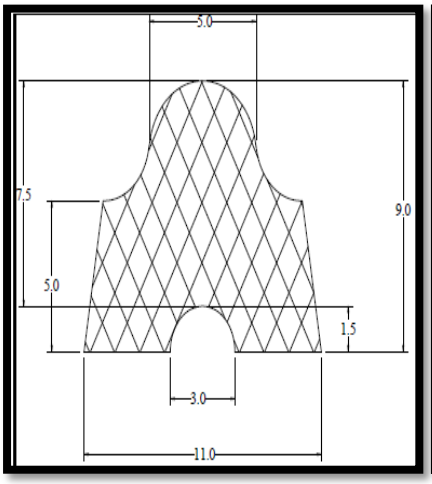
5.0
7.5
9.0
5.0
1.5
3.0
11.0

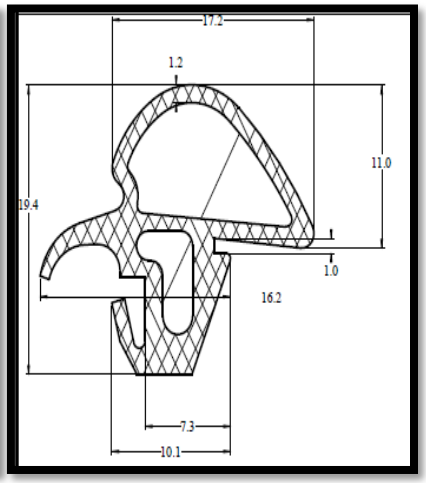
17.2
1.2
11.0
19.4
1.0
16.2
7.3
10.1

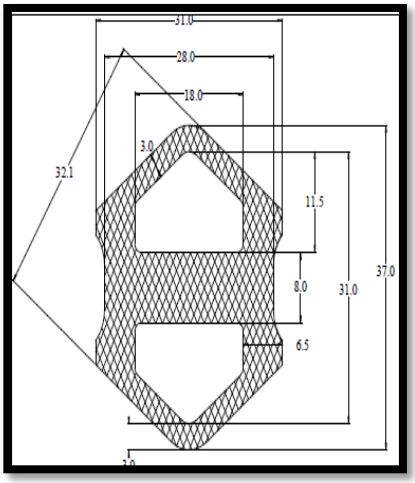
31.0
28.0
18.0
3.0
32.1
11.5
37.0
8.0
31.0
6.5

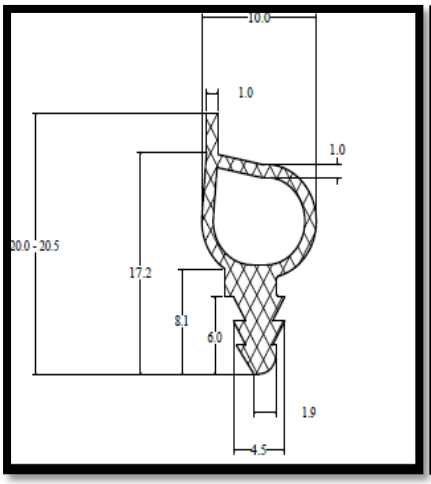
10.0
1.0
1.0
20.0 - 20.5
17.2
8.1
6.0
1.9
4.5

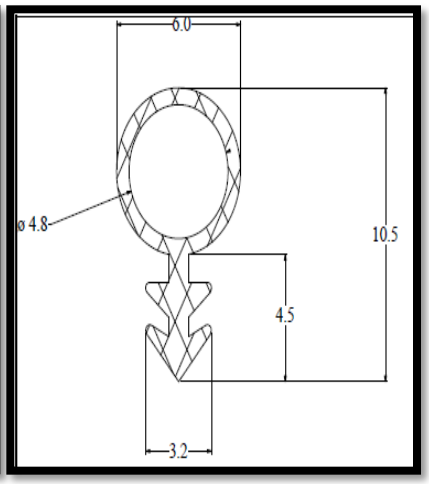
6.0
ø 4.8
10.5
4.5
3.2

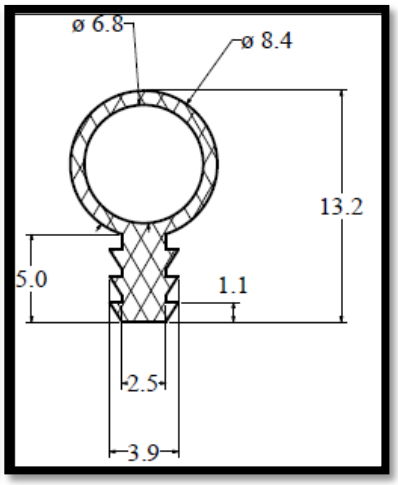
ø 6.8
ø 8.4
13.2
5.0
1.1
2.5
3.9

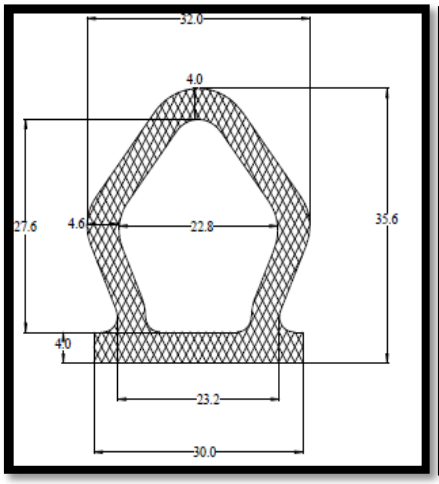
32.0
4.0
27.6
4.6
22.8
35.6
4.0
23.2
30.0

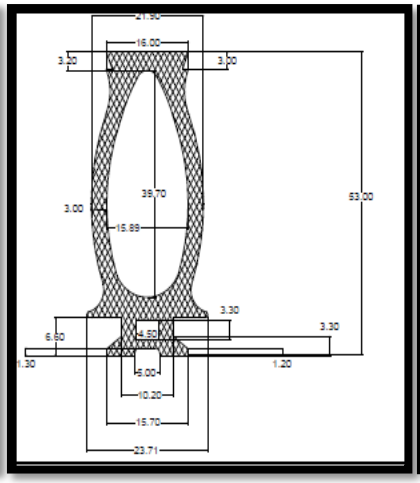
16.00
3.50
3.50
39.70
3.00
15.89
53.00
3.30
3.30
6.60
1.30
1.20
5.00
10.20
15.70
23.71

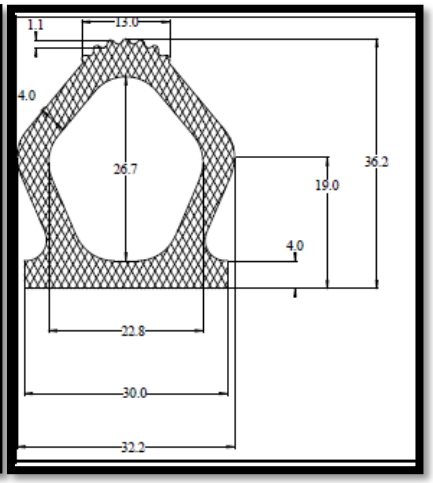
1.1
13.0
4.0
26.7
36.2
19.0
4.0
22.8
30.0
32.2

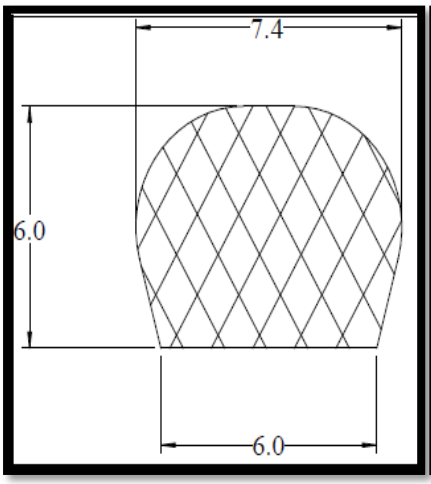
7.4
6.0
6.0

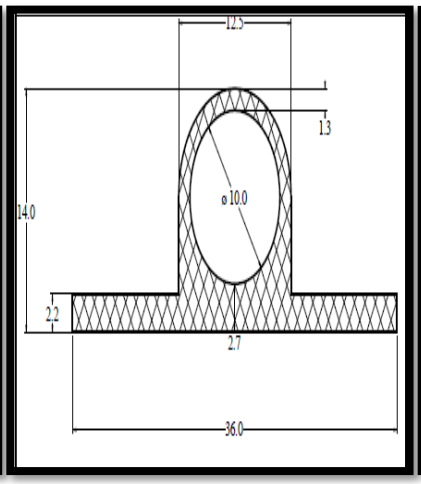
12.5
13
14.0
ø 10.0
2.2
2.7
36.0

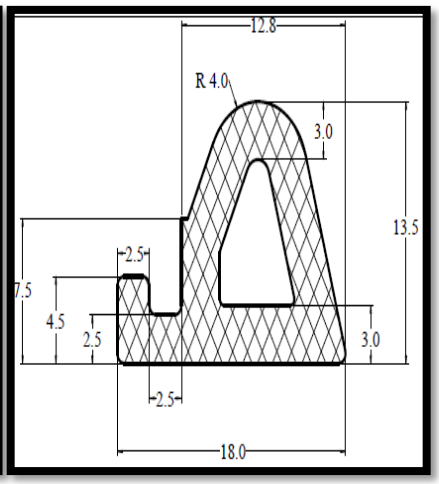
12.8
R 4.0
3.0
13.5
2.5
7.5
4.5
2.5
3.0
2.5
18.0

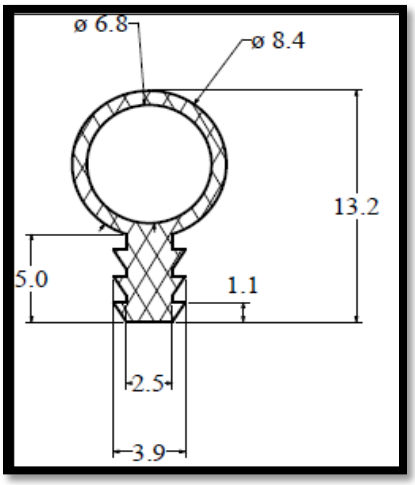
ø 6.8
ø 8.4
13.2
5.0
1.1
2.5
3.9

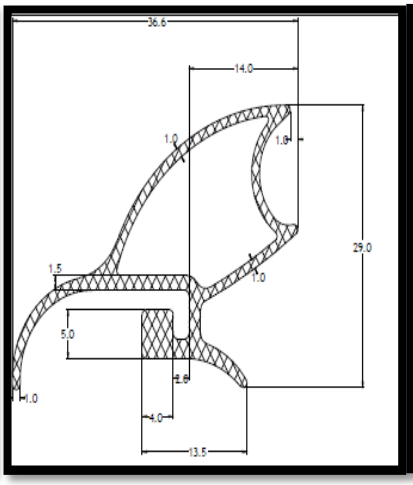
36.6
14.0
1.0
1.0
29.0
1.5
1.0
5.0
1.0
4.0
13.5

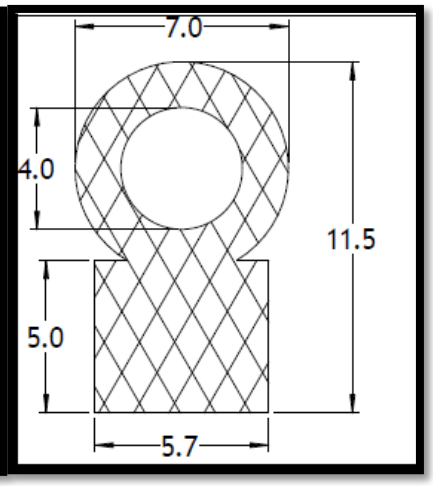
7.0
4.0
11.5
5.0
5.7

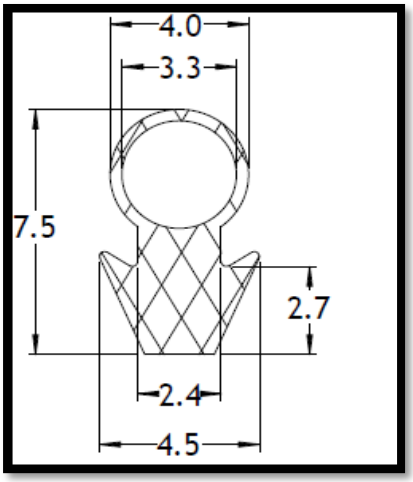
4.0
3.3
7.5
2.7
2.4
4.5

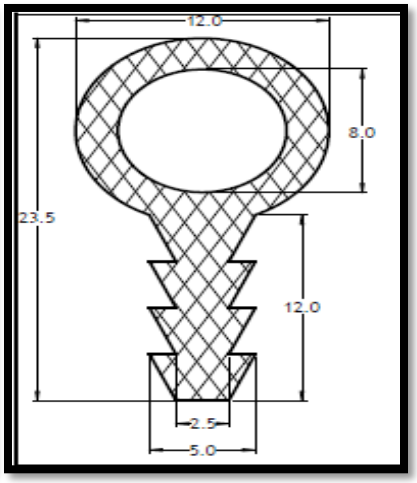
12.0
8.0
23.5
12.0
2.5
5.0

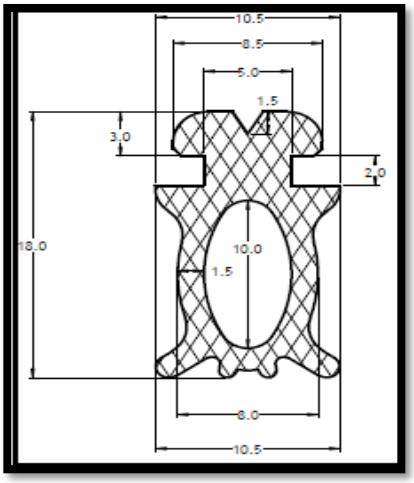
10.5
8.5
5.0
1.5
3.0
2.0
18.0
10.0
1.5
8.0
10.5

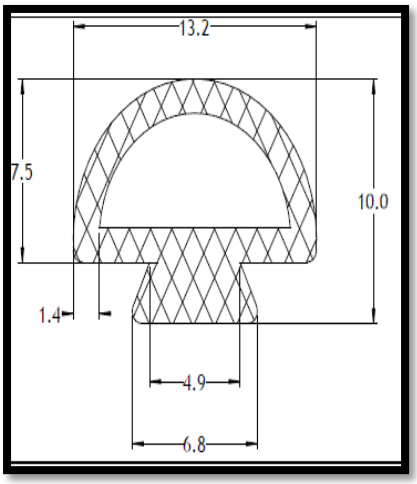
13.2
7.5
10.0
1.4
4.9
6.8

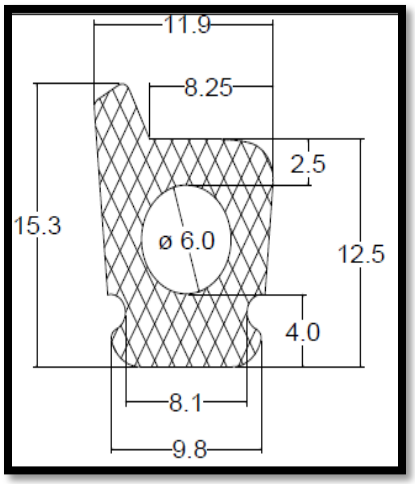
11.9
8.25
2.5
15.3
ø 6.0
12.5
4.0
8.1
9.8

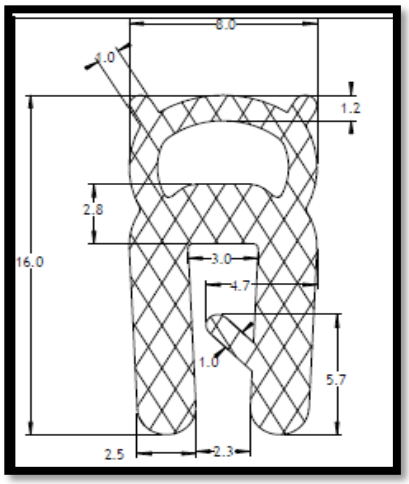
8.0
1.0
1.2
2.8
16.0
3.0
4.7
1.0
5.7
2.5
2.3

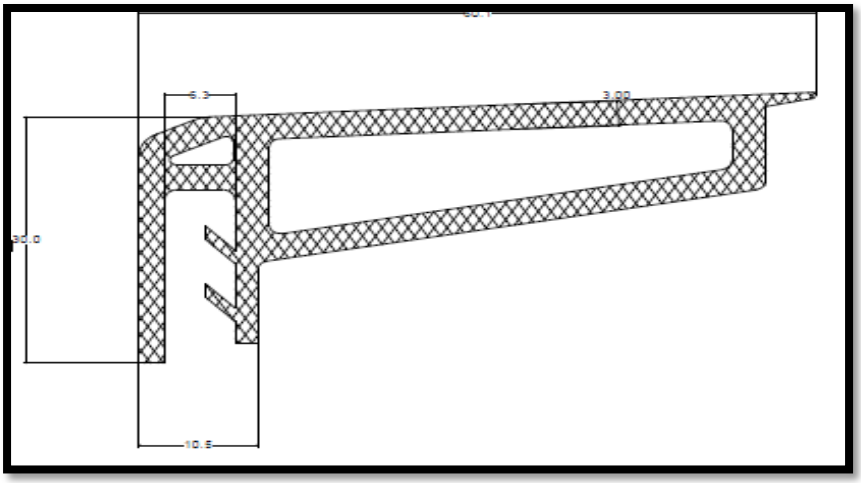
6.3
3.00
30.0
10.5

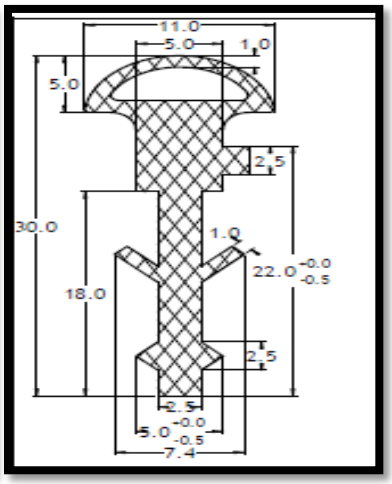
11.0
5.0
1.0
5.0
2.5
30.0
1.0
22.0 -0.0 -0.5
18.0
2.5
2.5
5.0 -0.0 -0.5
7.4

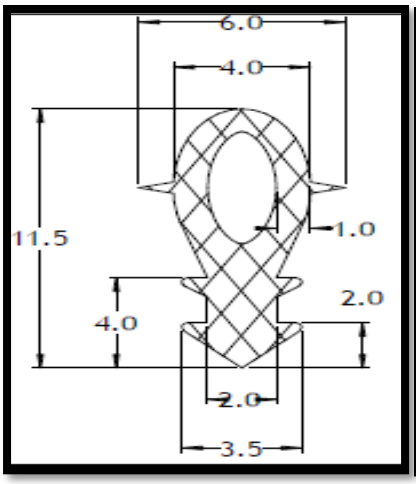
6.0
4.0
11.5
1.0
2.0
4.0
2.0
3.5

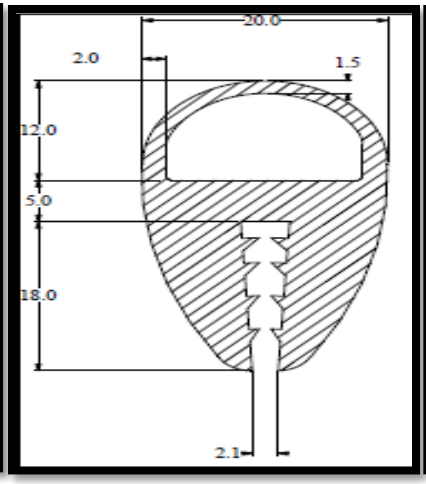
20.0
2.0
1.5
12.0
5.0
18.0
2.1

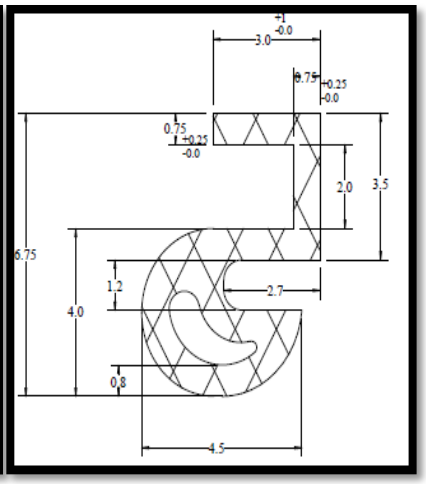
3.0 +1 -0.0
0.75 +0.25 -0.0
0.75 +0.25 -0.0
2.0
3.5
6.75
1.2
2.7
4.0
0.8
4.5

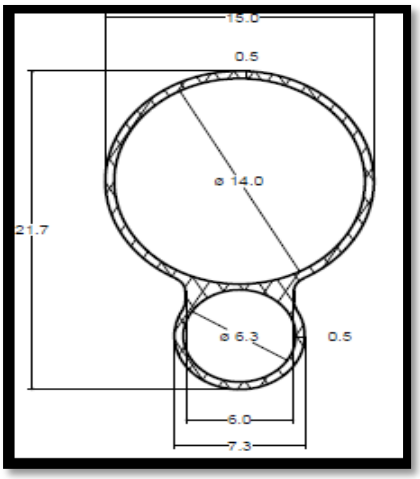
15.0
0.5
ø 14.0
21.7
ø 6.3
0.5
6.0
7.3

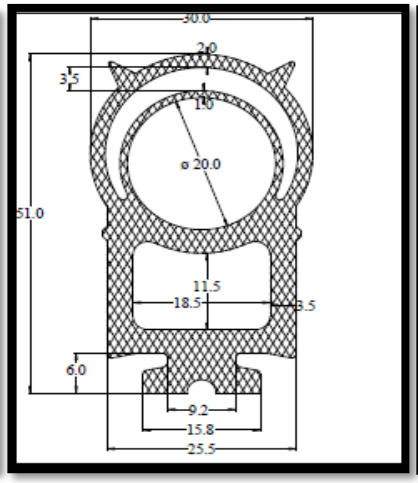
30.0
2.0
3.5
1.0
ø 20.0
51.0
11.5
18.5
3.5
6.0
9.2
15.8
25.5

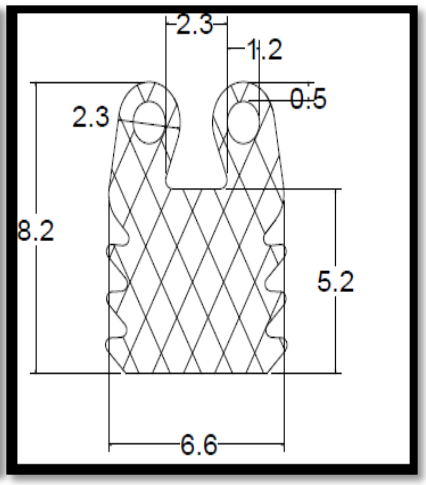
2.3
1.2
0.5
2.3
8.2
5.2
6.6

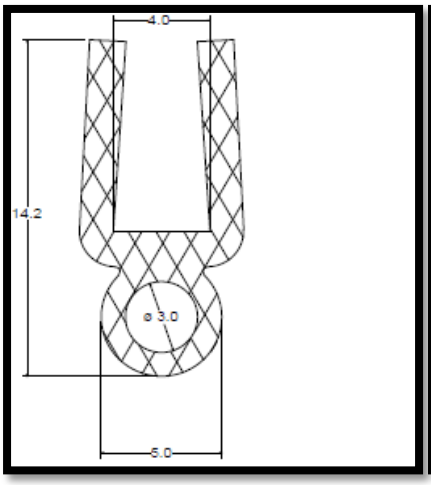
4.0
14.2
ø 3.0
6.0

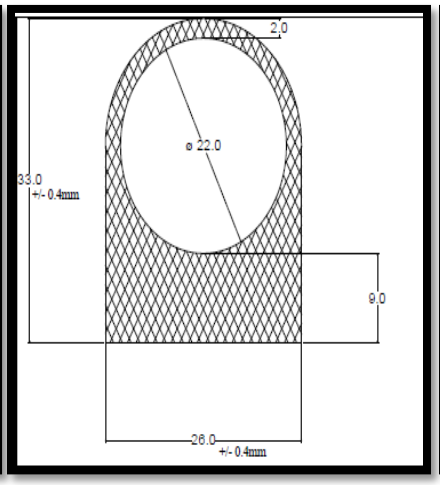
2.0
ø 22.0
33.0
+/- 0.4mm
9.0
26.0
+/- 0.4mm

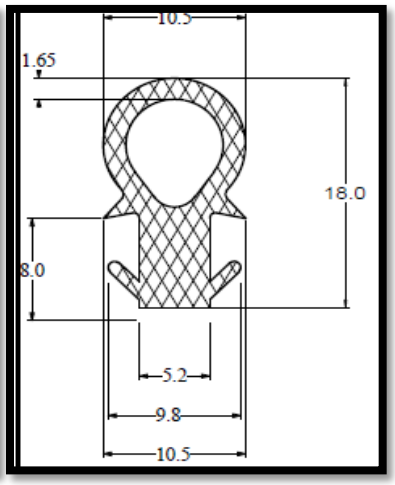
10.5
1.65
18.0
8.0
5.2
9.8
10.5

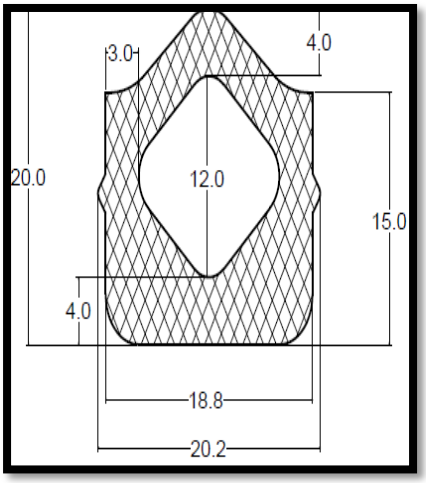
3.0
4.0
20.0
12.0
15.0
4.0
18.8
20.2

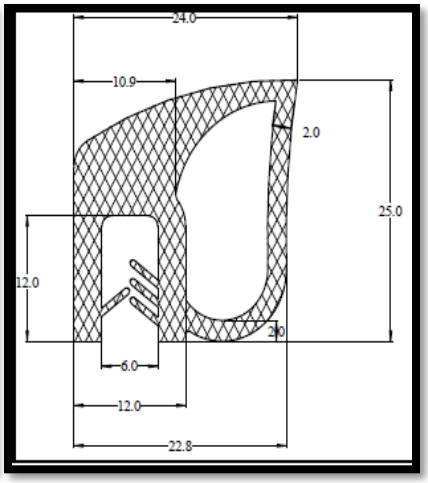
24.0
10.9
2.0
25.0
12.0
2.0
6.0
12.0
22.8

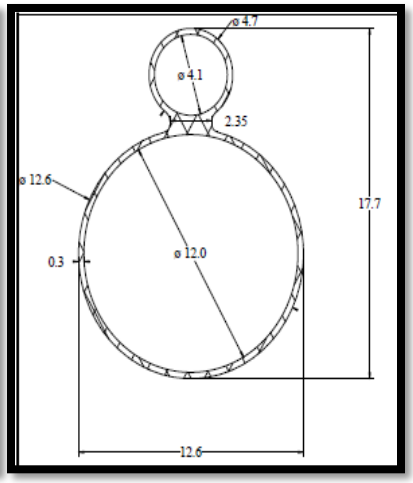
ø 4.7
ø 4.1
2.35
ø 12.6
17.7
0.3
ø 12.0
12.6

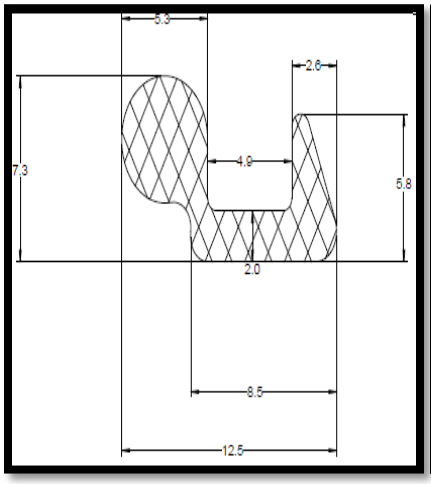
5.3
2.6
7.3
4.9
5.8
2.0
8.5
12.5

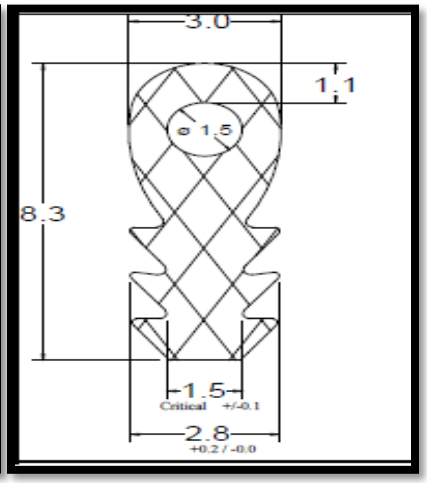
3.0
1.1
ø 1.5
8.3
1.5
Critical +/-0.1
2.8
+0.2 / -0.0

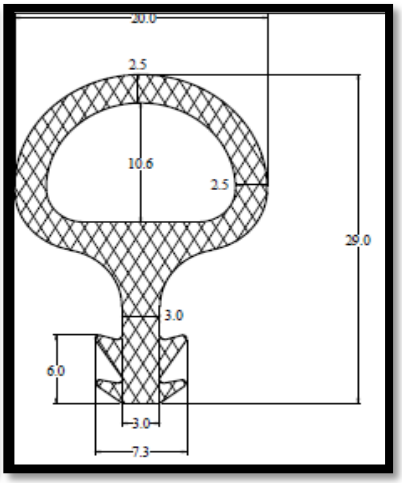
20.0
2.5
10.6
2.5
29.0
3.0
6.0
3.0
7.3

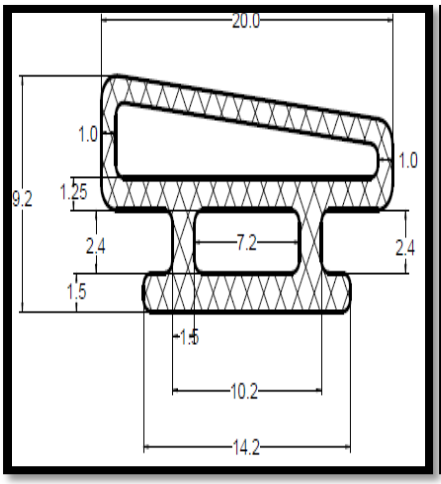
20.0
1.0
1.0
9.2
1.25
2.4
7.2
2.4
1.5
1.5
10.2
14.2

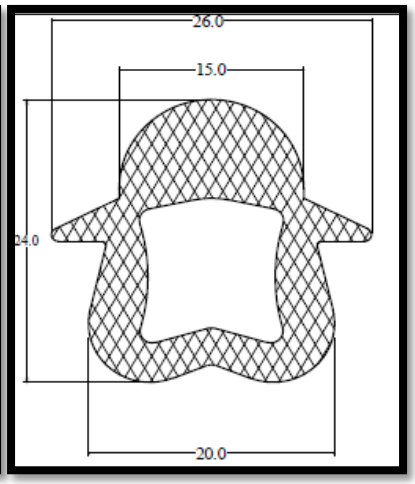
26.0
15.0
24.0
20.0

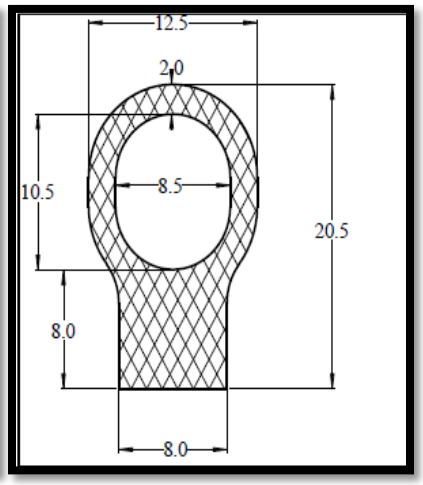
12.5
2.0
10.5
8.5
20.5
8.0
8.0

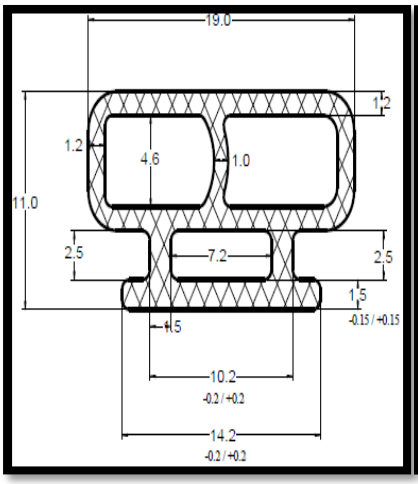
19.0
1.2
1.2
4.6
1.0
11.0
2.5
7.2
2.5
1.5
-0.15 / +0.15
1.5
10.2
-0.2 / +0.2
14.2
-0.2 / +0.2

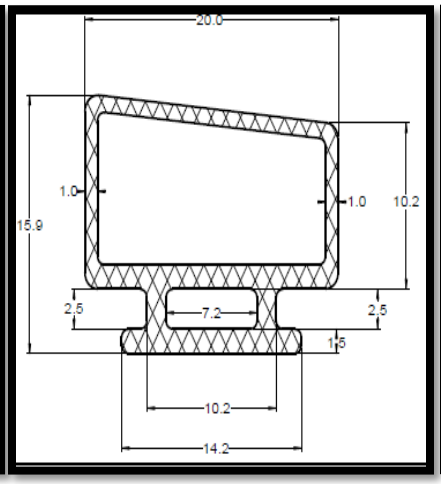
20.0
1.0
1.0
10.2
15.9
2.5
7.2
2.5
1.5
10.2
14.2

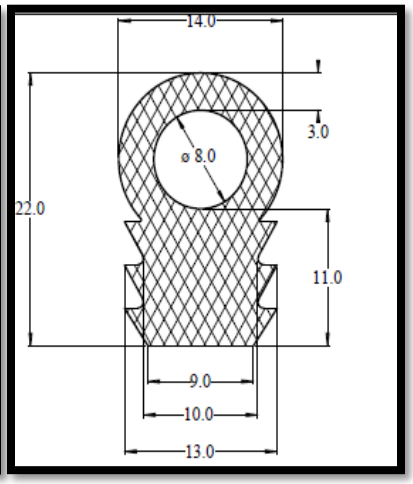
14.0
3.0
ø 8.0
22.0
11.0
9.0
10.0
13.0

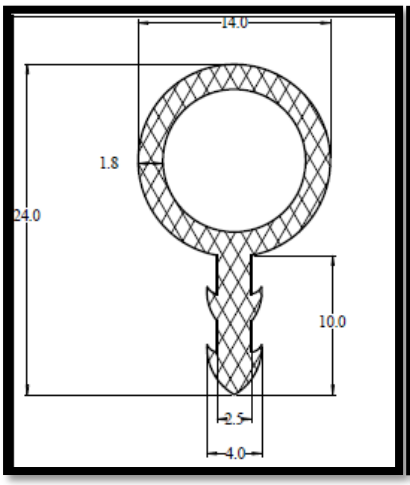
14.0
1.8
24.0
10.0
2.5
4.0

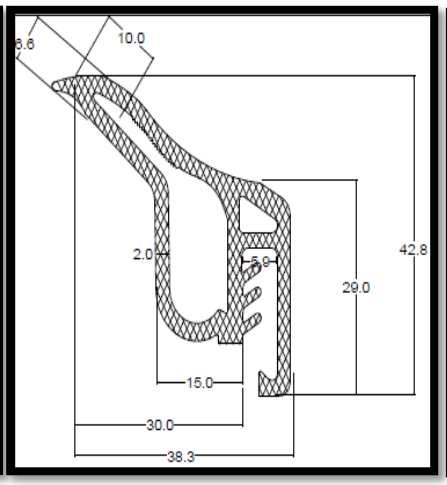
8.6
10.0
2.0
5.9
42.8
29.0
15.0
30.0
38.3

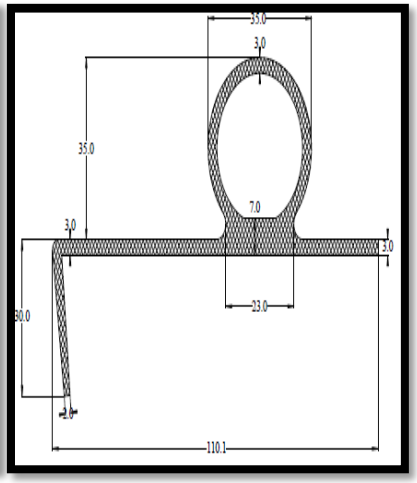
35.0
3.0
35.0
7.0
3.0
3.0
23.0
30.0
2.0
110.1

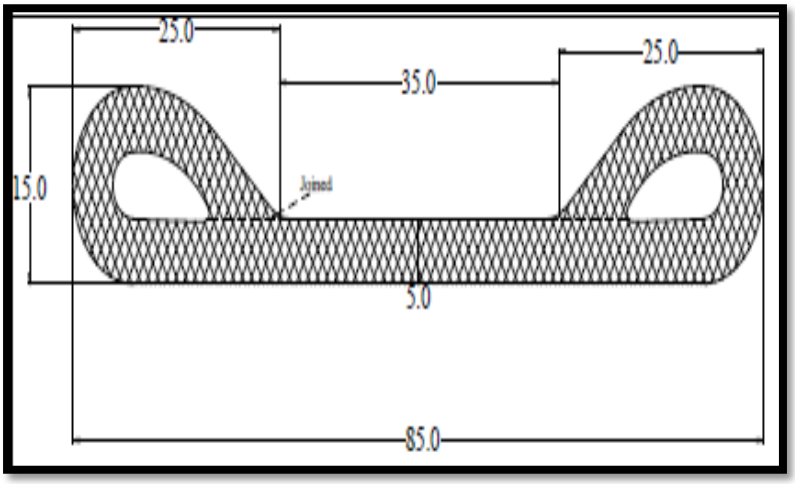
25.0
35.0
25.0
15.0
Joined
5.0
85.0

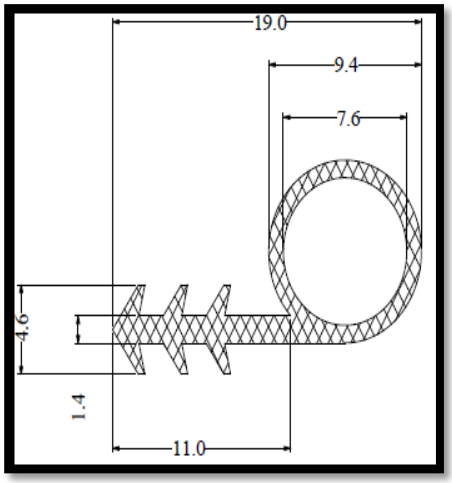
19.0
9.4
7.6
4.6
1.4
11.0

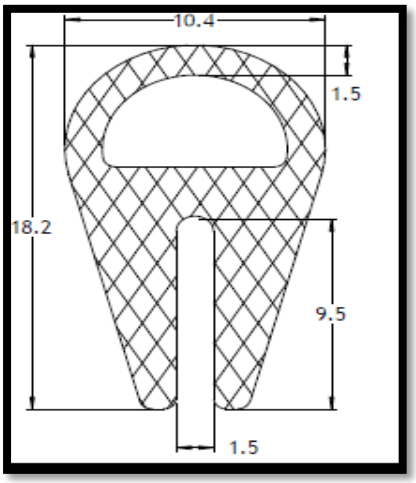
10.4
1.5
18.2
9.5
1.5

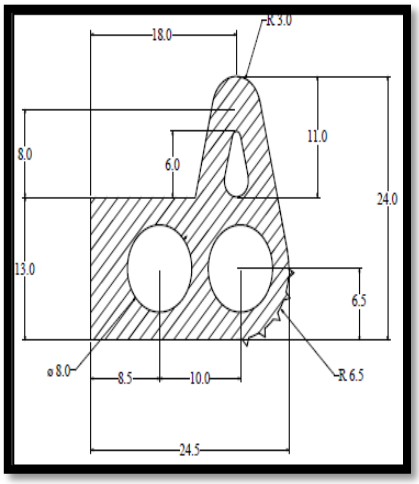
18.0
R 3.0
11.0
8.0
6.0
24.0
13.0
6.5
ø 8.0
8.5
10.0
R 6.5
24.5

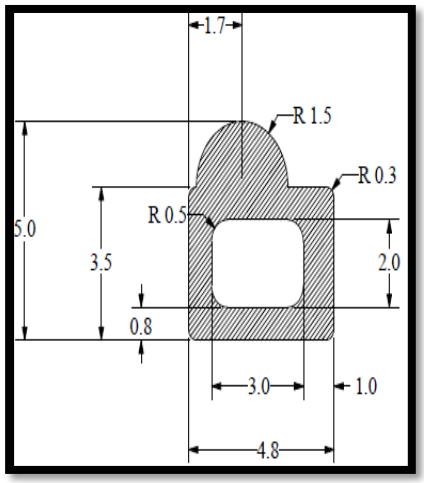
1.7
R 1.5
R 0.3
R 0.5
5.0
3.5
2.0
0.8
3.0
1.0
4.8

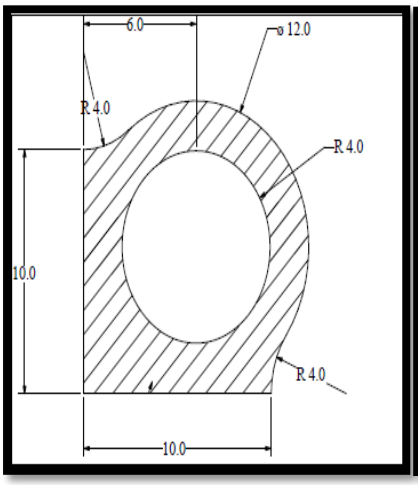
6.0
ø 12.0
R 4.0
R 4.0
10.0
R 4.0
10.0

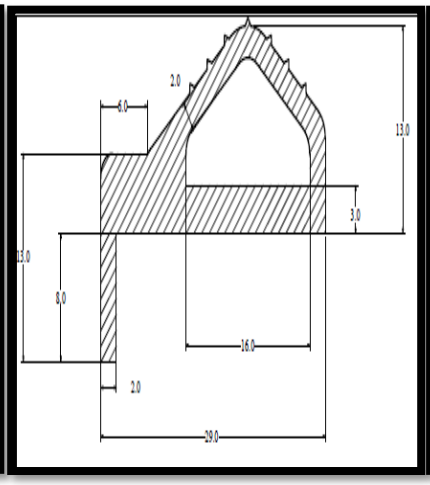
2.0
6.0
13.0
3.0
13.0
8.0
16.0
2.0
20.0

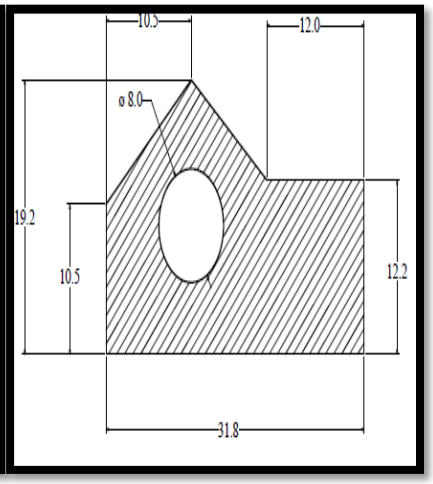
10.5
12.0
ø 8.0
19.2
10.5
12.2
31.8

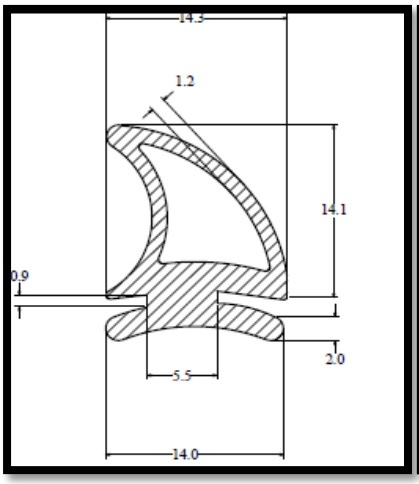
14.5
1.2
14.1
0.9
2.0
5.5
14.0

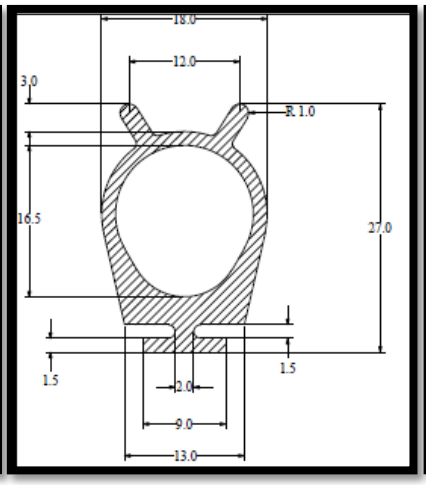
18.0
12.0
3.0
R 1.0
16.5
27.0
1.5
1.5
2.0
9.0
13.0

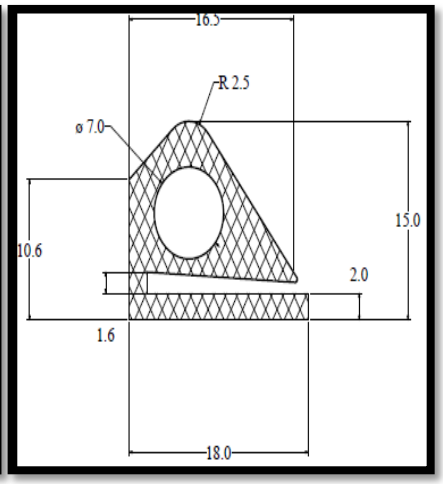
16.5
R 2.5
ø 7.0
15.0
10.6
2.0
1.6
18.0

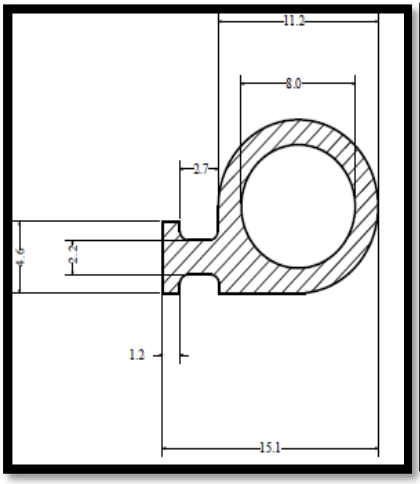
11.2
8.0
2.7
4.6
2.4
1.2
15.1

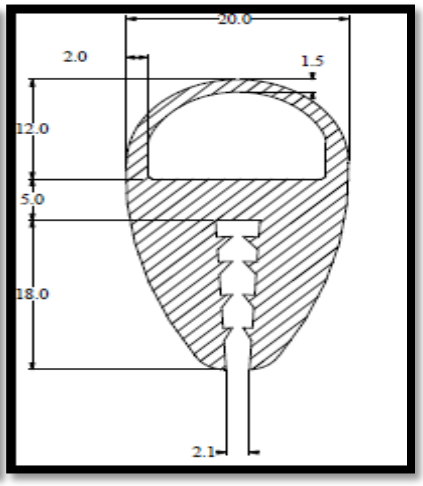
20.0
2.0
1.5
12.0
5.0
18.0
2.1

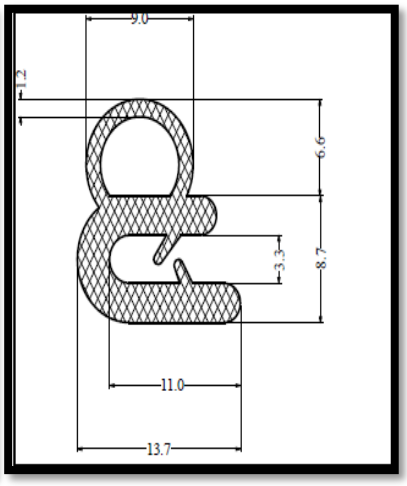
9.0
1.2
6.6
3.3
8.7
11.0
13.7

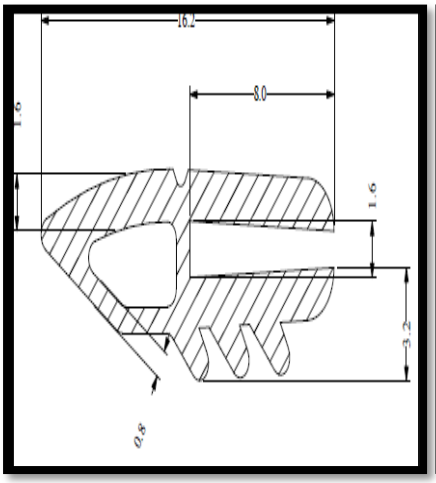
16.2
8.0
1.6
1.6
3.2
0.8

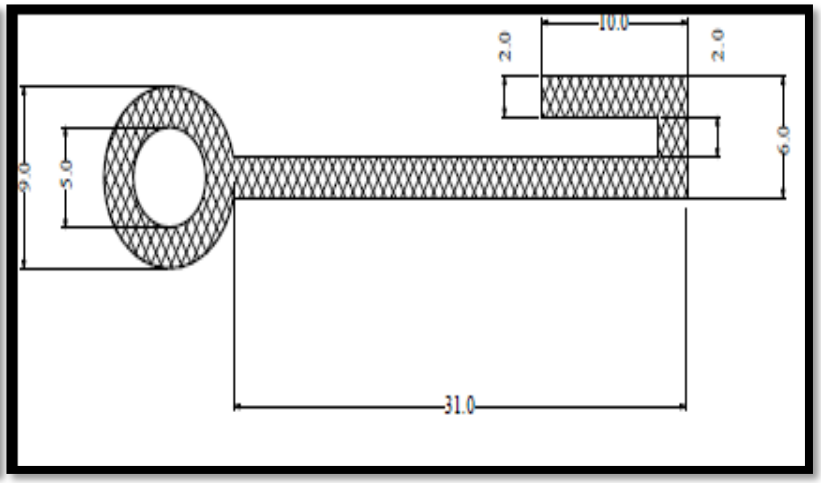
10.0
2.0
2.0
6.0
9.0
5.0
31.0

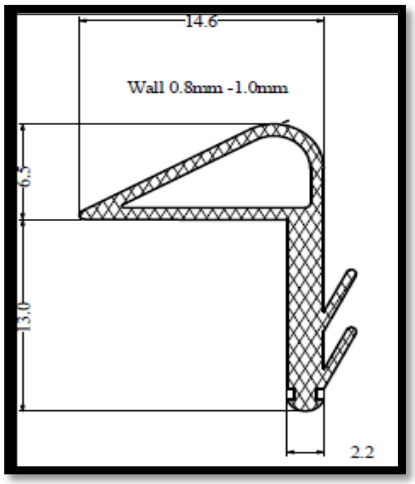
14.6
Wall 0.8mm -1.0mm
6.5
13.0
2.2

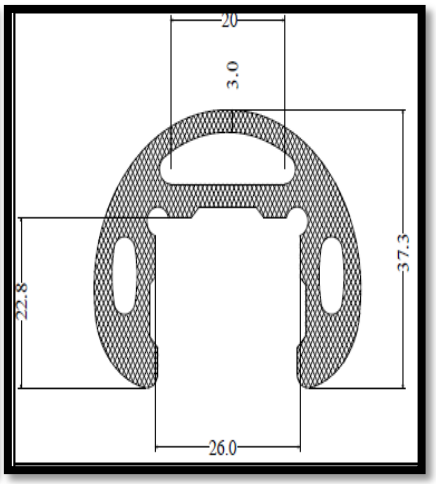
20
3.0
37.3
22.8
26.0

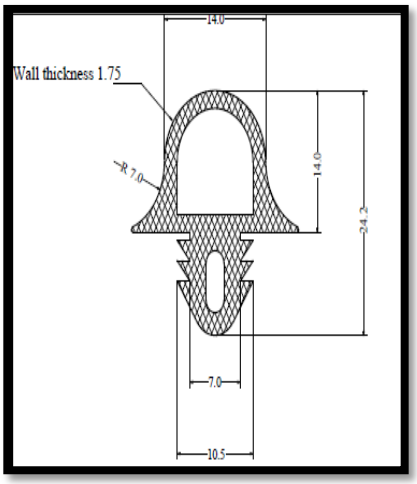
14.0
Wall thickness 1.75
R 7.0
14.0
24.2
7.0
10.5

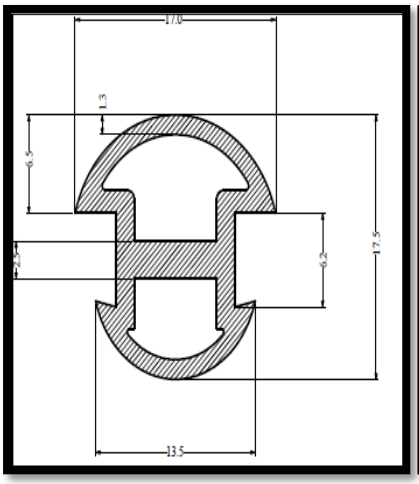
17.0
1.3
6.5
2.3
6.2
17.5
13.5

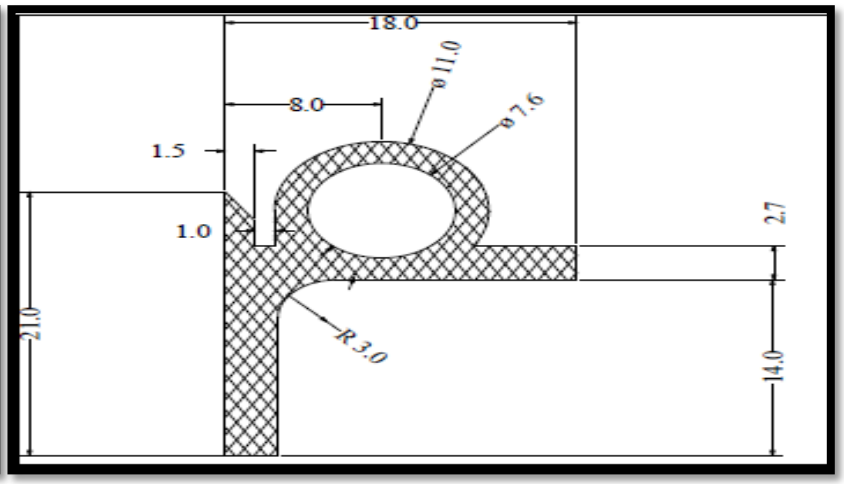
18.0
ø 11.0
8.0
ø 7.6
1.5
1.0
2.7
21.0
R 3.0
14.0

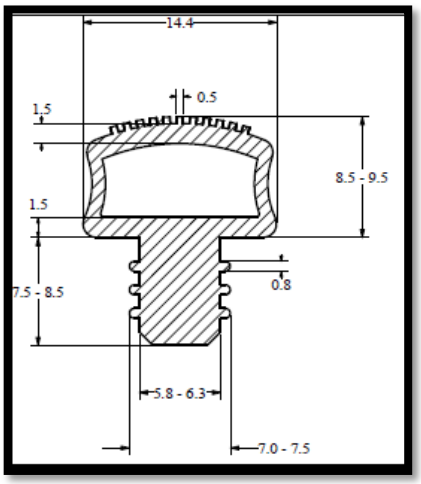
14.4
0.5
1.5
8.5 - 9.5
1.5
0.8
7.5 - 8.5
5.8 - 6.3
7.0 - 7.5

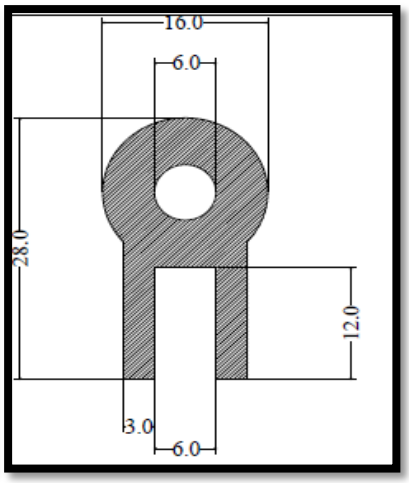
16.0
6.0
28.0
12.0
3.0
6.0

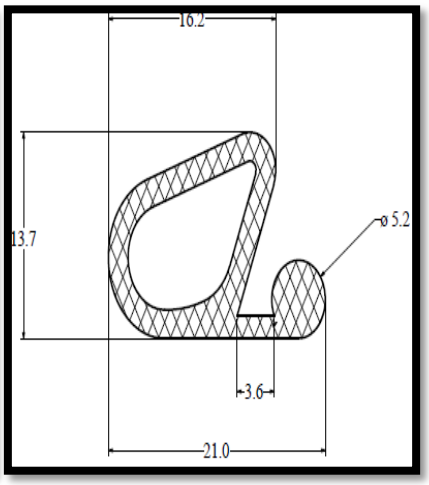
10.2
ø 5.2
13.7
3.6
21.0

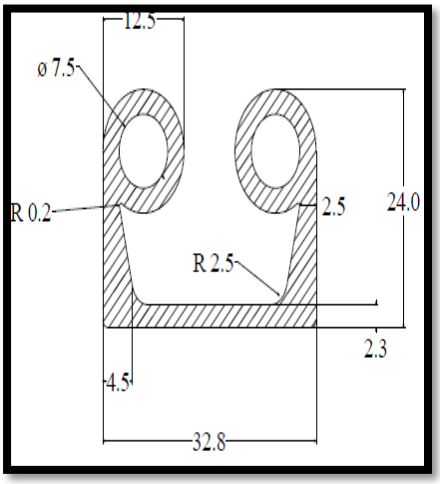
12.5
ø 7.5
R 0.2
2.5
24.0
R 2.5
2.3
4.5
32.8

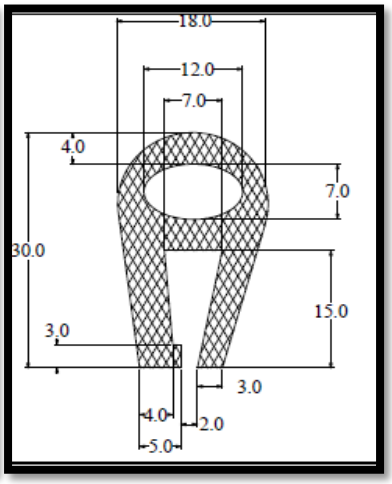
18.0
12.0
7.0
4.0
7.0
30.0
15.0
3.0
3.0
4.0
2.0
5.0

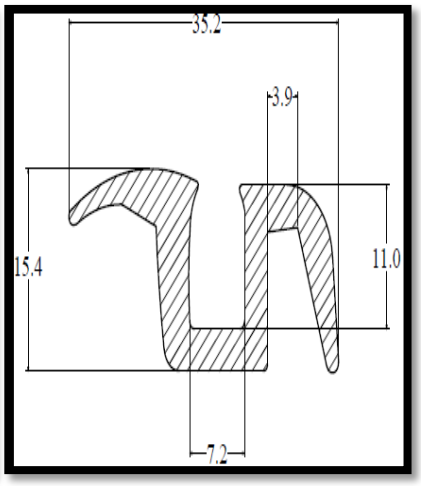
35.2
3.9
15.4
11.0
7.2

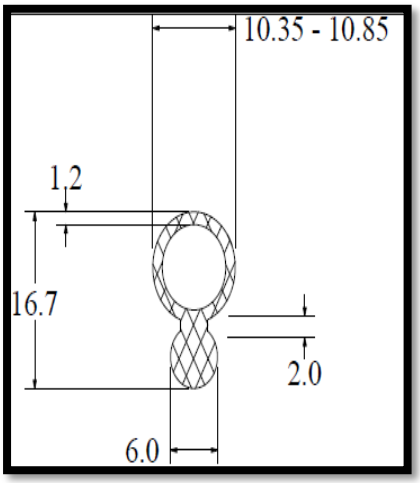
10.35 - 10.85
1.2
16.7
2.0
6.0

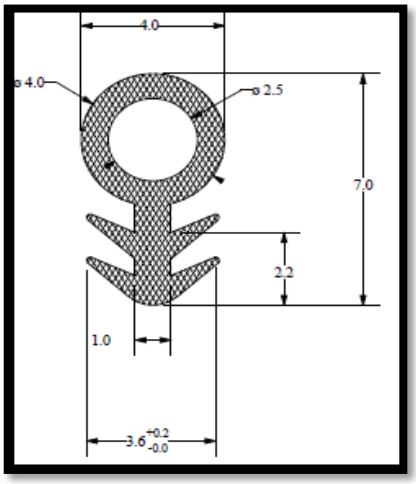
4.0
ø 4.0
ø 2.5
7.0
2.2
1.0
3.6 +0.2 -0.0

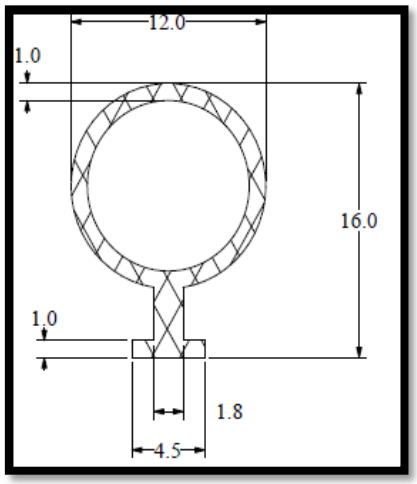
12.0
1.0
16.0
1.0
1.8
4.5

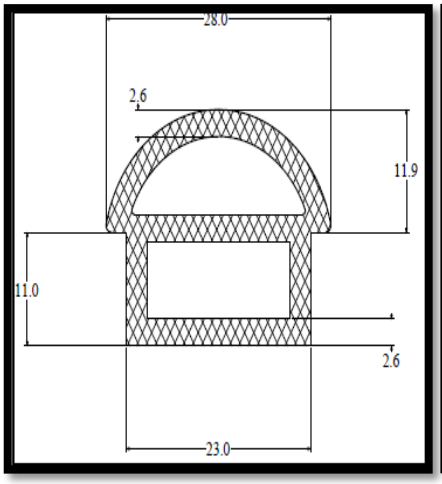
28.0
2.6
11.9
11.0
2.6
23.0

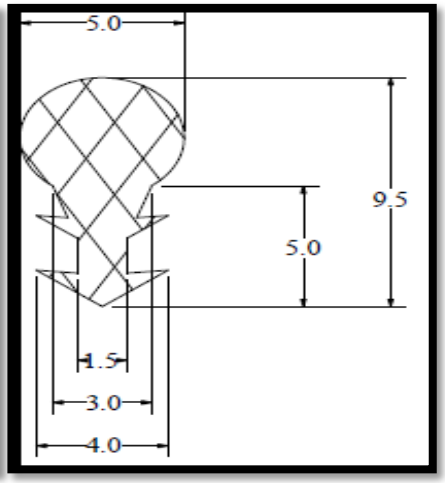
5.0
9.5
5.0
1.5
3.0
4.0

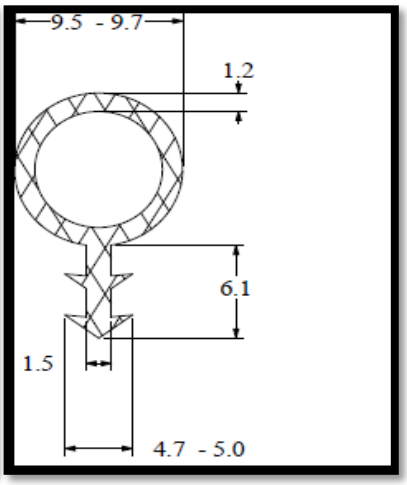
9.5 - 9.7
1.2
6.1
1.5
4.7 - 5.0

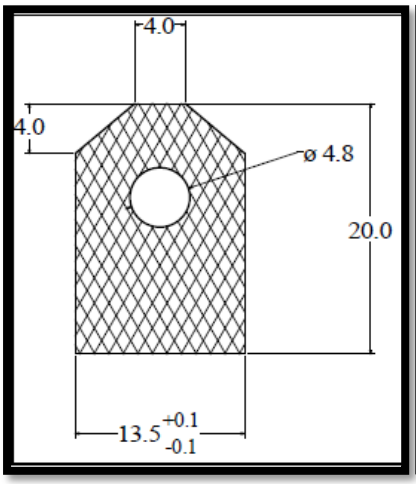
4.0
4.0
ø 4.8
20.0
13.5 +0.1 -0.1

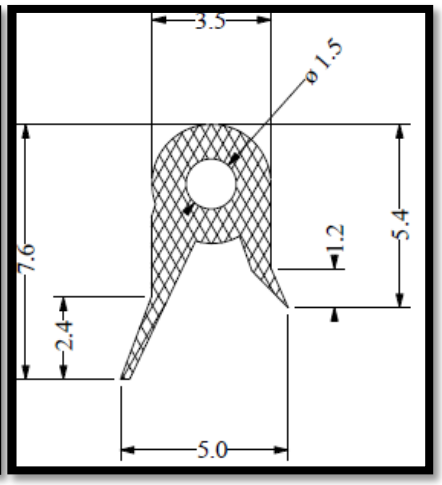
3.5
ø 1.5
7.6
2.4
1.2
5.4
5.0

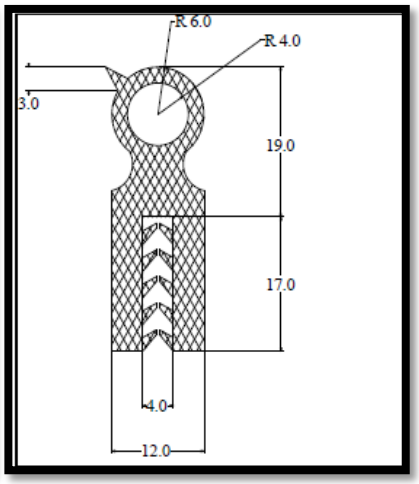
R 6.0
R 4.0
3.0
19.0
17.0
4.0
12.0

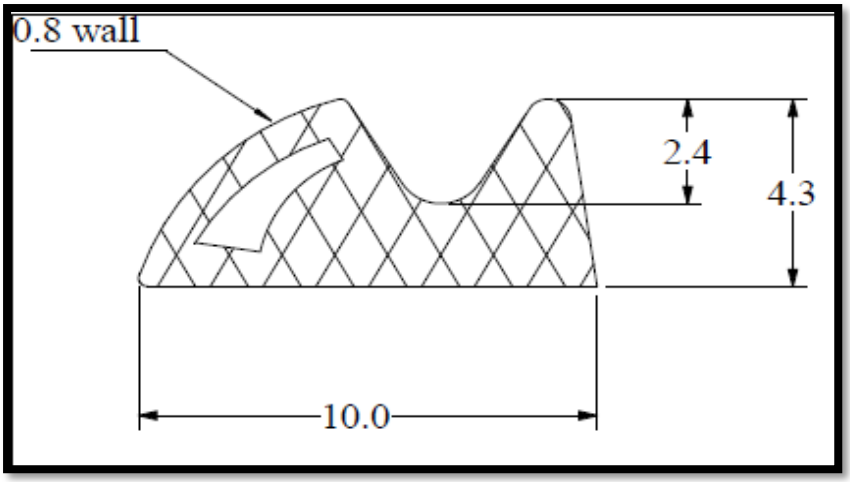
0.8 wall
2.4
4.3
10.0

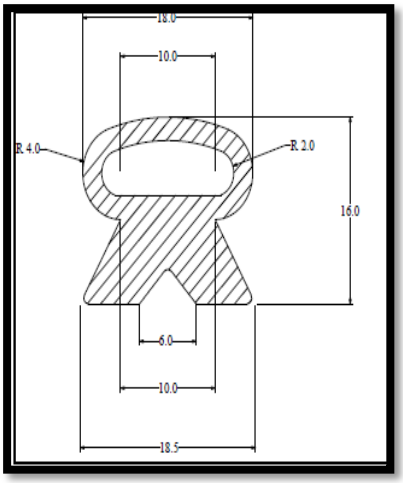
18.0
10.0
R 4.0
R 2.0
16.0
6.0
10.0
18.5

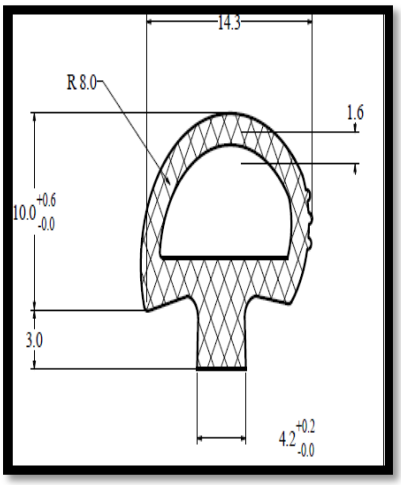
14.3
R 8.0
1.6
10.0 +0.6 -0.0
3.0
4.2 +0.2 -0.0

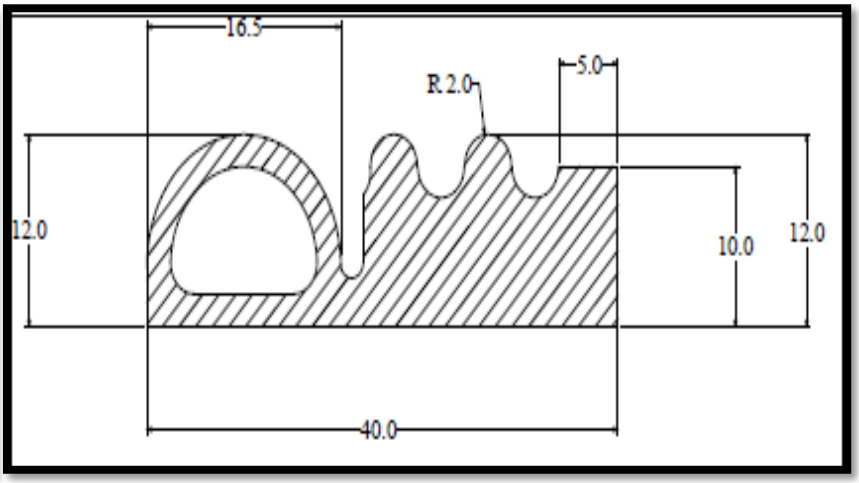
16.5
5.0
R 2.0
12.0
10.0
12.0
40.0

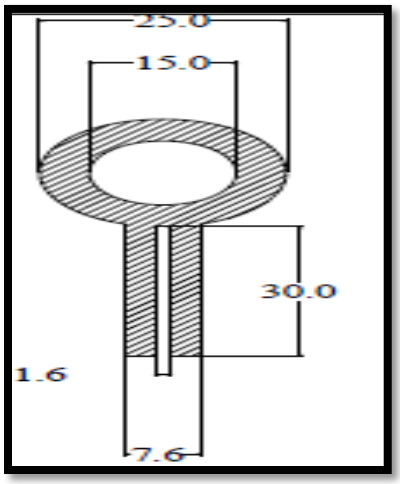
25.0
15.0
30.0
1.6
7.6

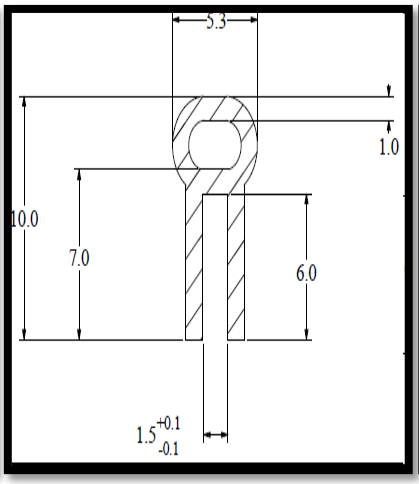
5.3
1.0
10.0
7.0
6.0
1.5 +0.1 -0.1

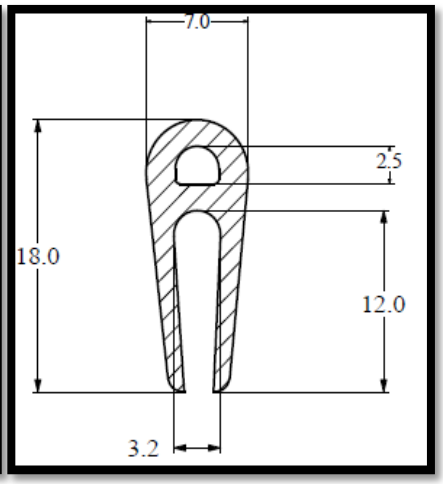
7.0
2.5
18.0
12.0
3.2

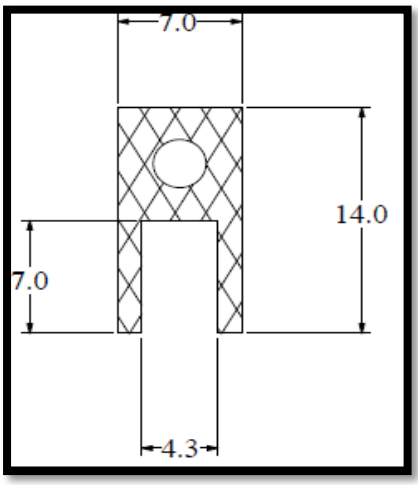
7.0
14.0
7.0
4.3

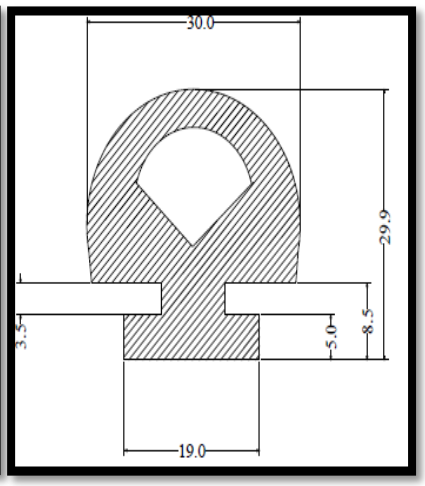
30.0
29.9
3.5
5.0
8.5
19.0

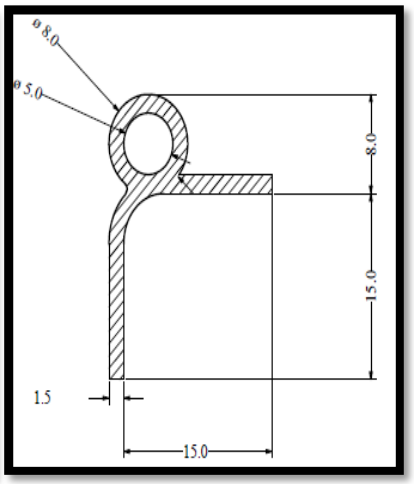
ø 8.0
ø 5.0
8.0
15.0
1.5
15.0

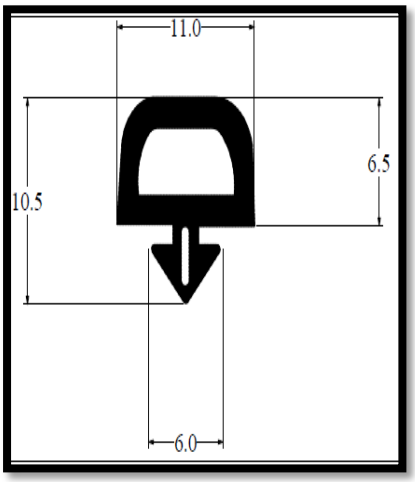
11.0
6.5
10.5
6.0

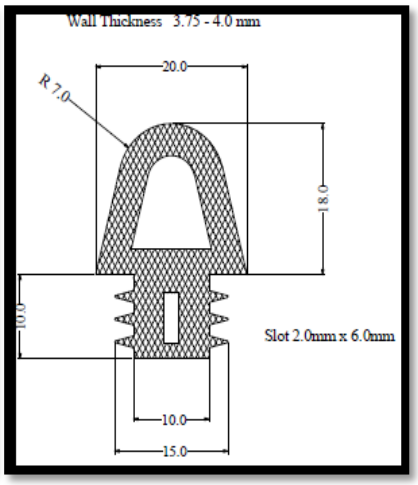
Wall Thickness 3.75 - 4.0 mm
20.0
R 7.0
18.0
10.0
Slot 2.0mm x 6.0mm
10.0
15.0

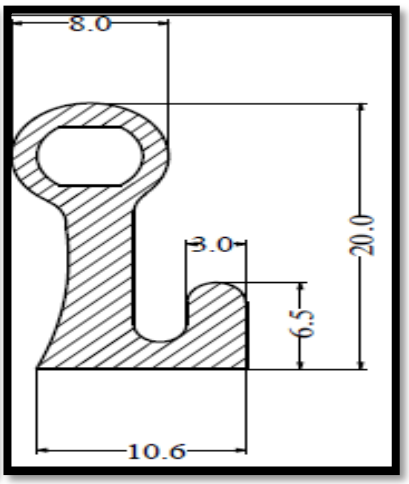
8.0
3.0
20.0
6.5
10.6

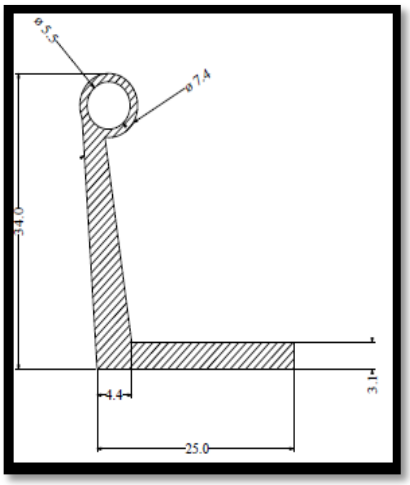
ø 5.5
ø 7.4
34.0
4.4
3.1
25.0

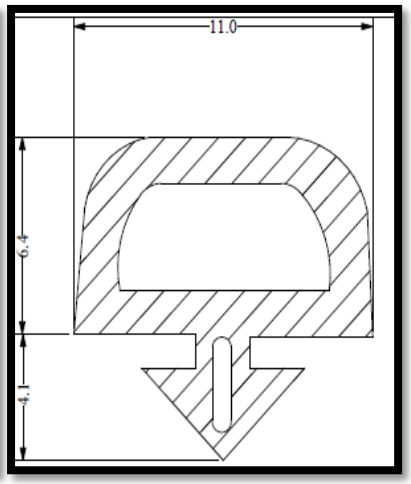
11.0
6.4
4.1

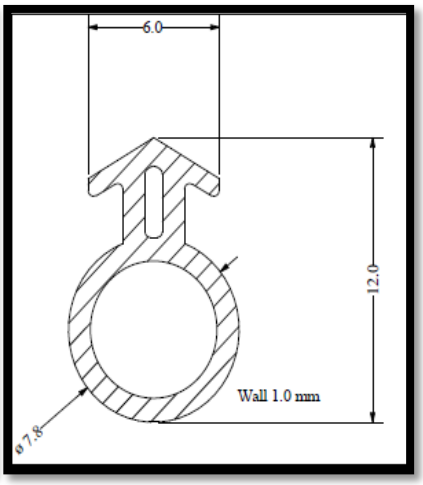
6.0
12.0
Wall 1.0 mm
ø 7.8

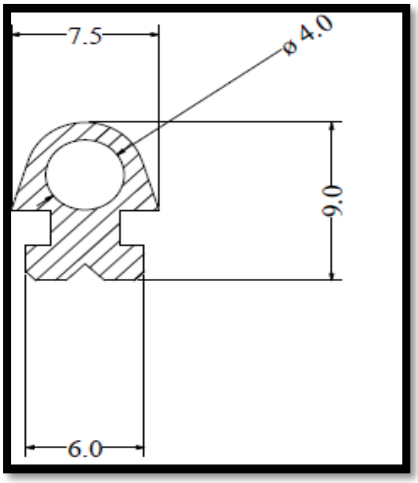
7.5
ø 4.0
9.0
6.0

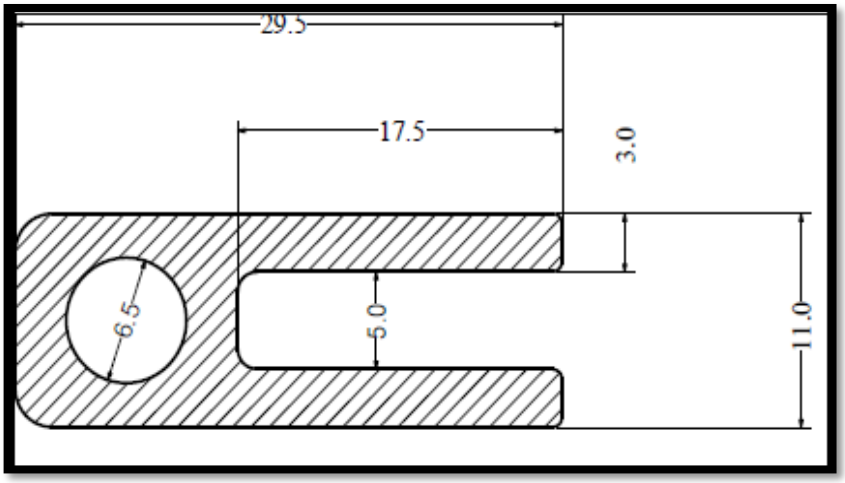
29.5
17.5
3.0
6.5
5.0
11.0

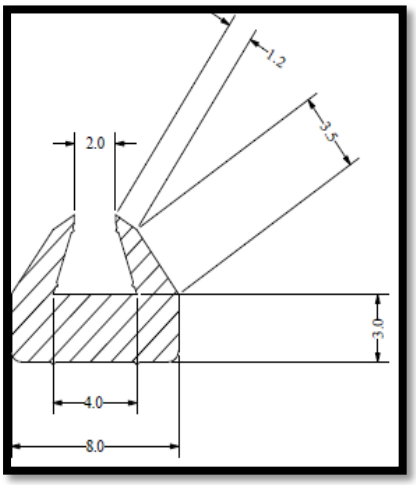
1.2
2.0
3.5
3.0
4.0
8.0

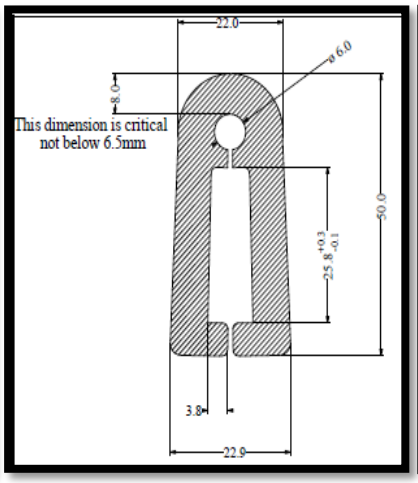
22.0
ø 6.0
8.0
This dimension is critical
not below 6.5mm
50.0
25.8 +0.3 -0.1
3.8
22.9

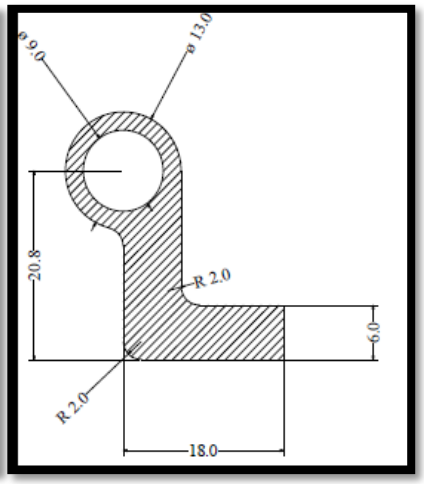
ø 9.0
ø 13.0
20.8
R 2.0
6.0
R 2.0
18.0

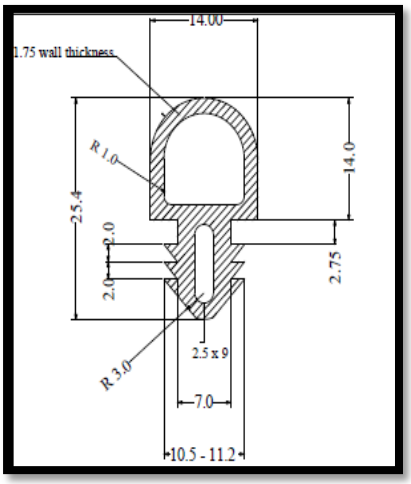
14.00
1.75 wall thickness
R 1.0
14.0
25.4
2.0
2.0
2.75
2.5 x 9
R 3.0
7.0
10.5 - 11.2

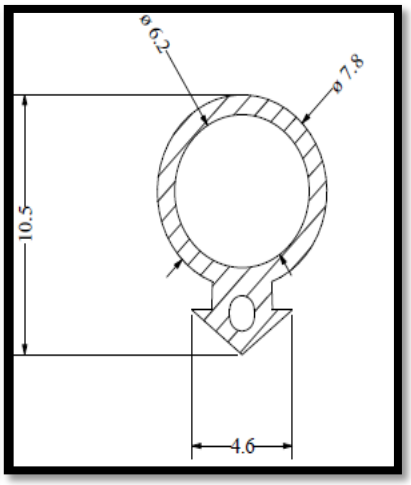
ø 6.2
ø 7.8
10.5
4.6

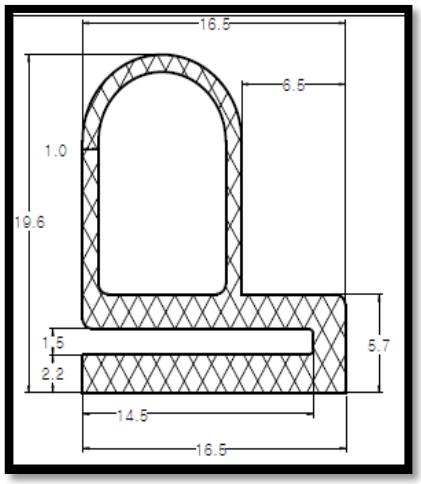
16.5
6.5
1.0
19.6
1.5
2.2
5.7
14.5
16.5

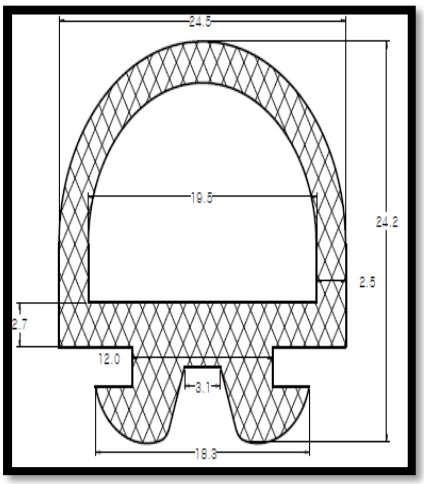
24.5
19.5
24.2
2.5
2.7
12.0
3.1
18.3

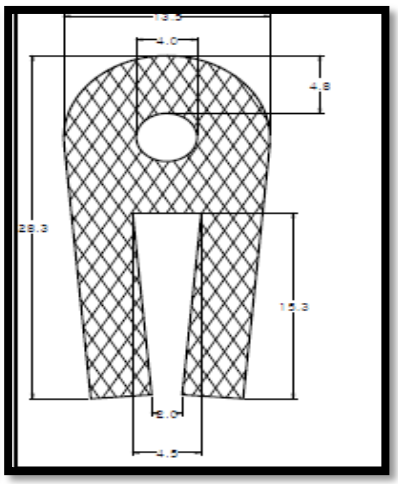
4.0
4.8
26.3
15.3
4.5

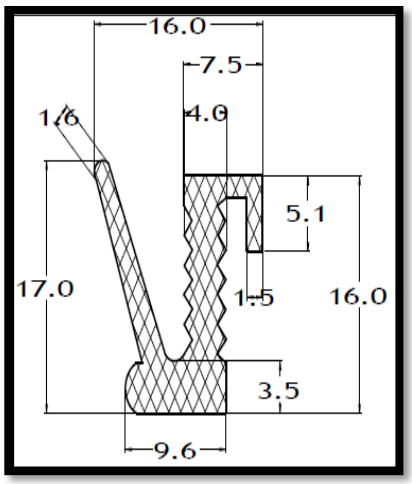
16.0
7.5
1.6
4.0
5.1
17.0
1.5
16.0
3.5
9.6

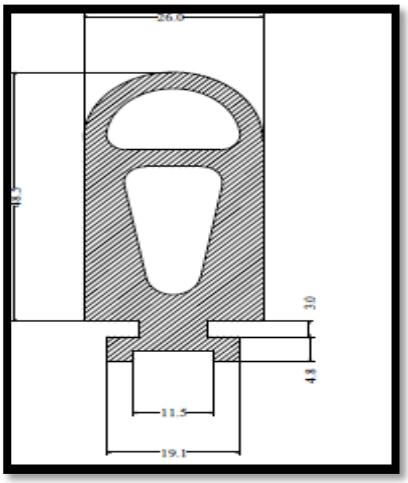
26.0
3.0
4.3
11.5
19.1

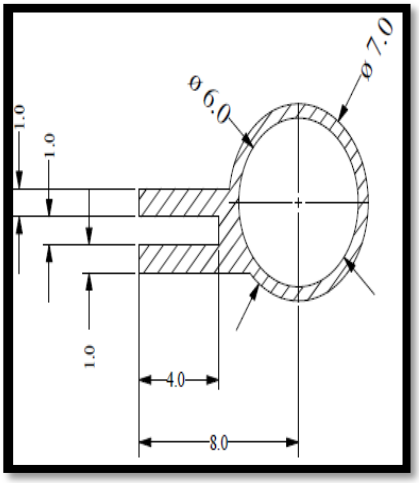
ø 7.0
ø 6.0
1.0
1.0
1.0
4.0
8.0

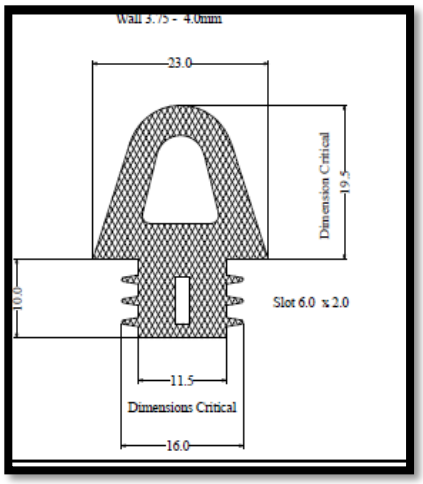
Wall 3.75 - 4.0mm
23.0
Dimension Critical
19.5
10.0
Slot 6.0 x 2.0
11.5
Dimensions Critical
16.0

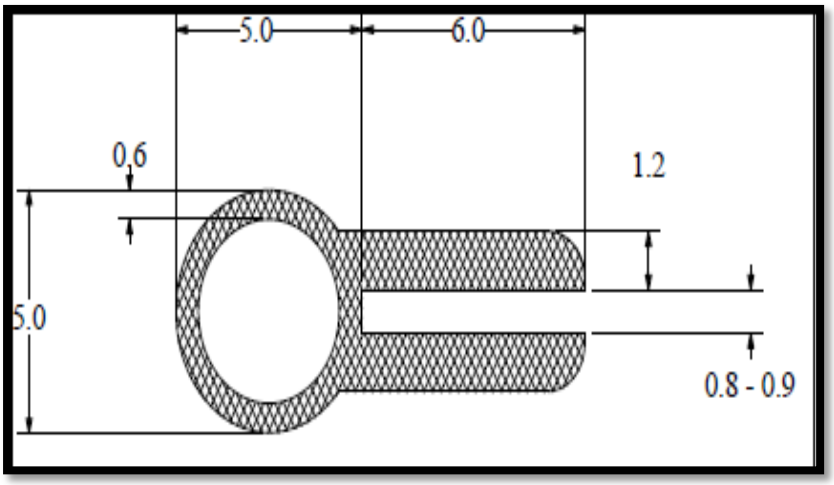
5.0
6.0
0,6
1.2
5.0
0.8 - 0.9

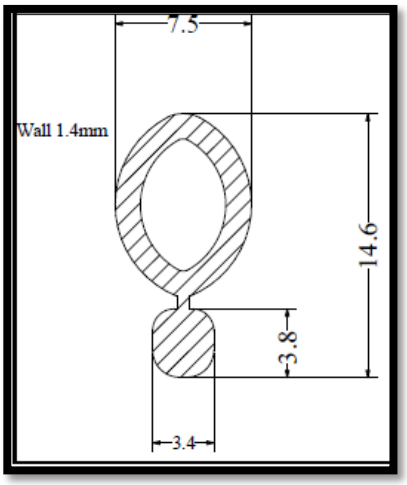
7.5
Wall 1.4mm
14.6
3.8
3.4

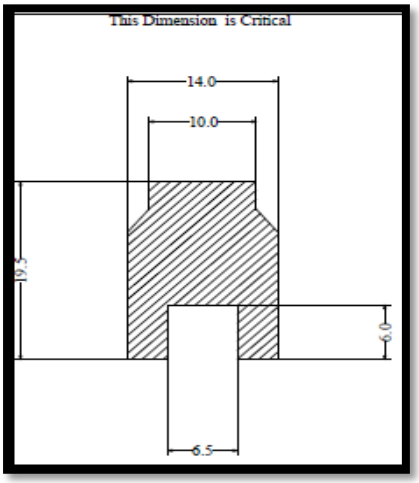
This Dimension is Critical
14.0
10.0
19.5
6.0
6.5

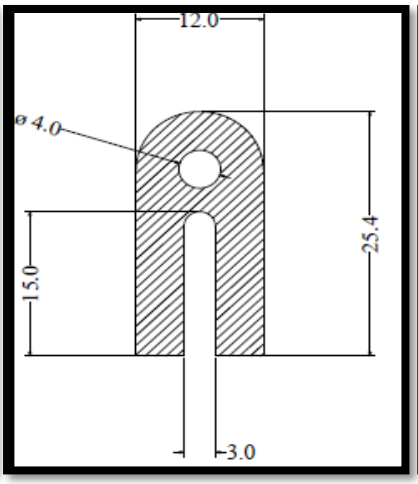
12.0
ø 4.0
25.4
15.0
3.0

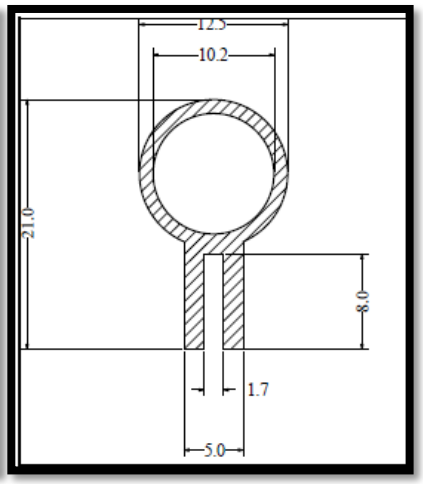
12.5
10.2
21.0
8.0
1.7
5.0

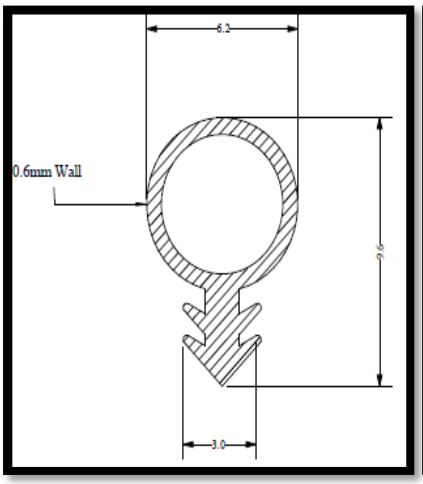
6.2
0.6mm Wall
9.6
3.0

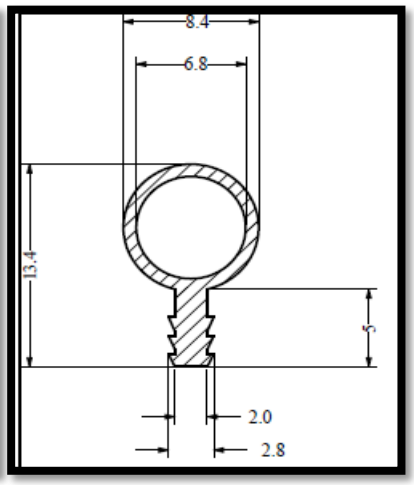
8.4
6.8
13.4
5
2.0
2.8

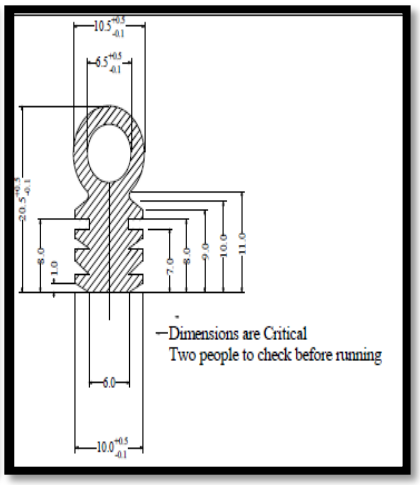
Dimensions are Critical
Two people to check before running

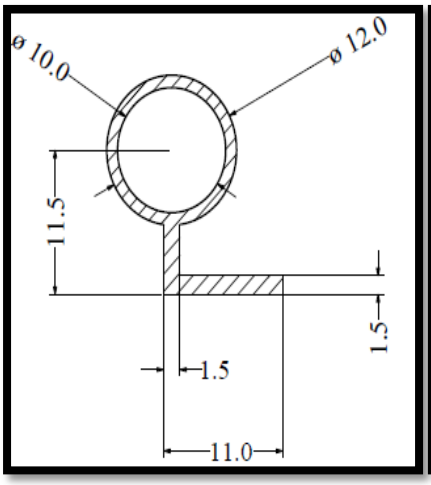
ø 10.0
ø 12.0
11.5
1.5
1.5
11.0

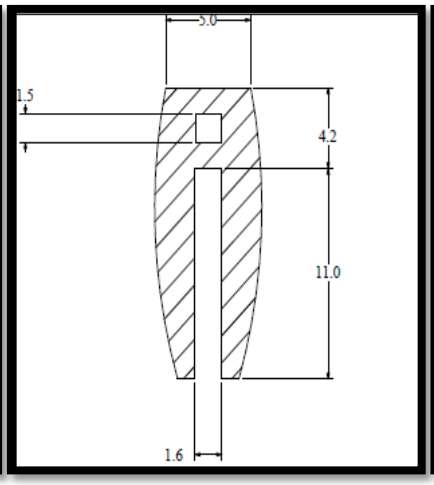
5.0
1.5
4.2
11.0
1.6

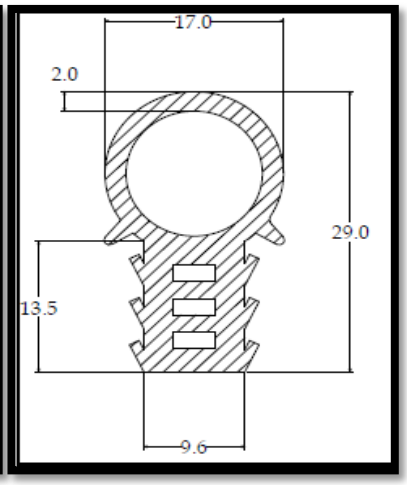
17.0
2.0
29.0
13.5
9.6

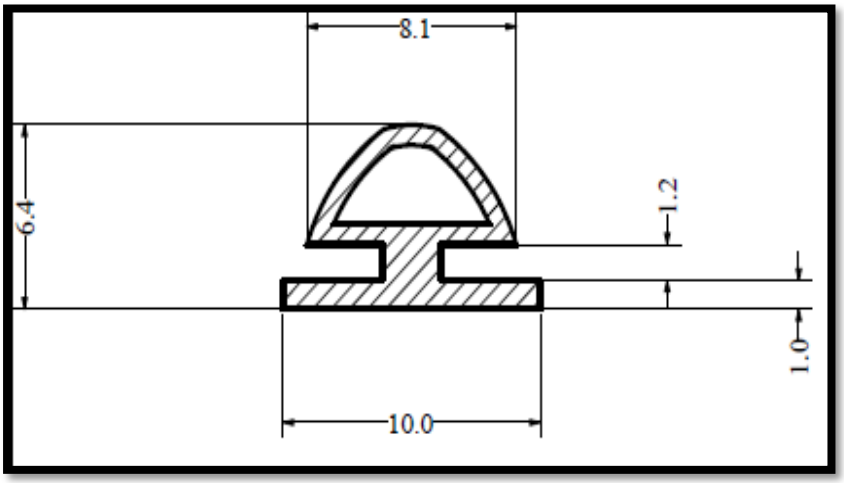
8.1
6.4
1.2
1.0
10.0

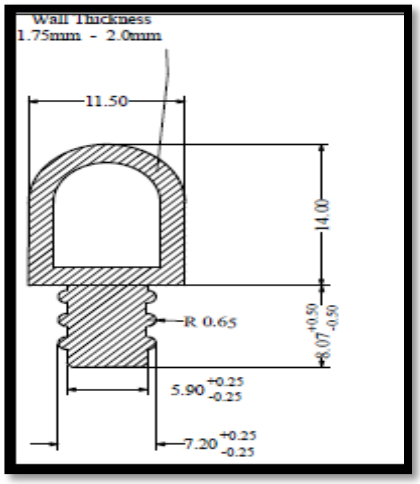
Wall Thickness
1.75mm - 2.0mm
11.50
14.00
R 0.65
8.07 +0.50 -0.50
5.90 +0.25 -0.25
7.20 +0.25 -0.25

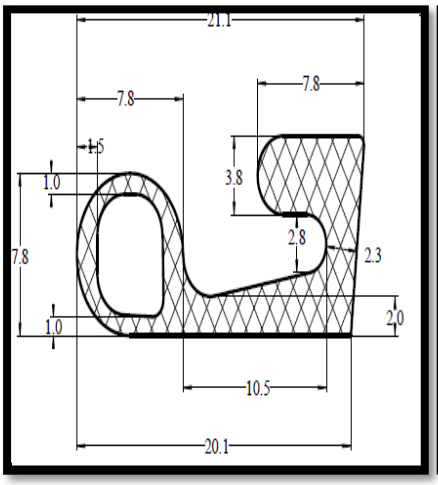
21.1
7.8
7.8
1.5
1.0
3.8
2.8
2.3
7.8
1.0
2.0
10.5
20.1

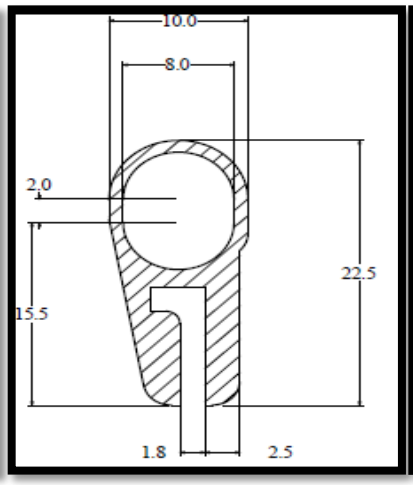
10.0
8.0
2.0
22.5
15.5
1.8
2.5

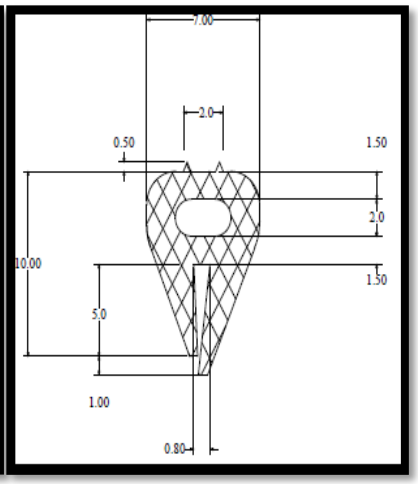
7.00
2.0
0.50
1.50
2.0
10.00
1.50
5.0
1.00
0.80

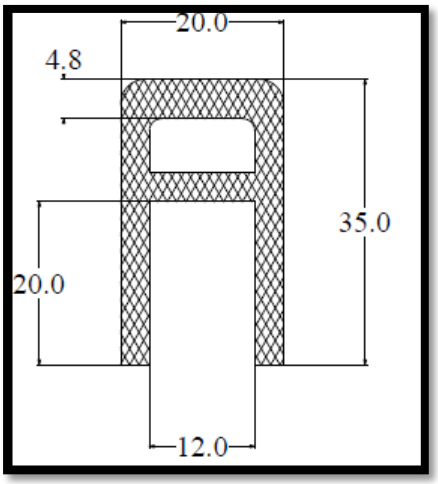
20.0
4.8
35.0
20.0
12.0

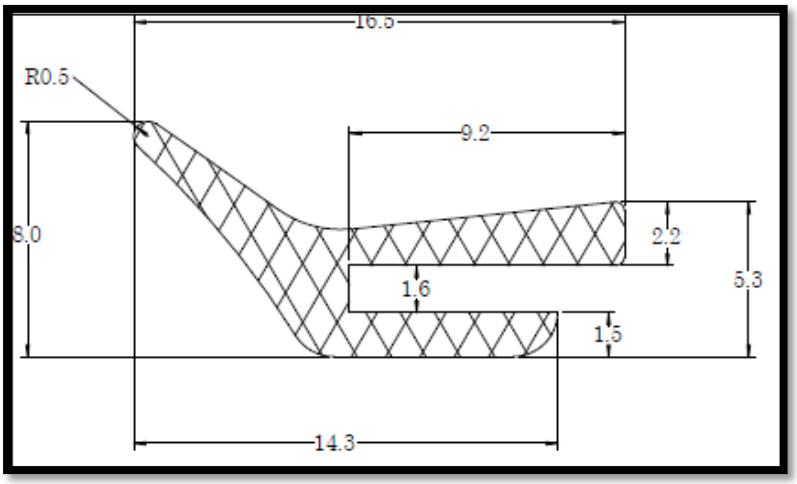
16.5
R0.5
9.2
8.0
2.2
1.6
5.3
1.5
14.3

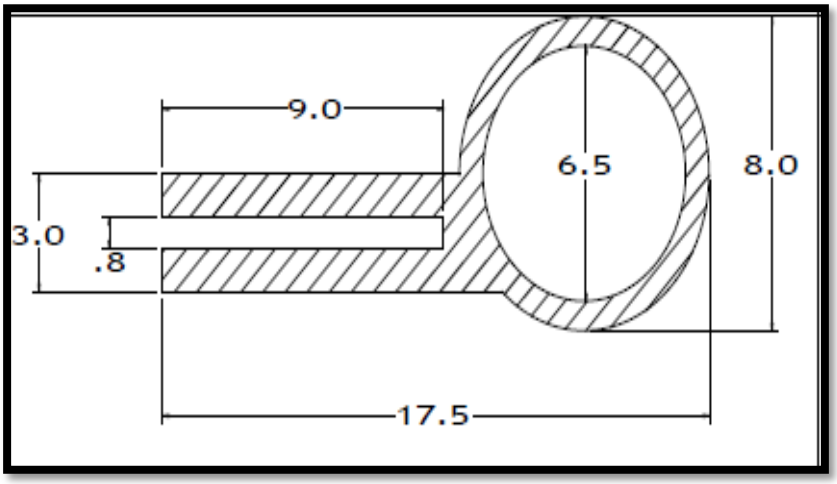
9.0
6.5
8.0
3.0
.8
17.5

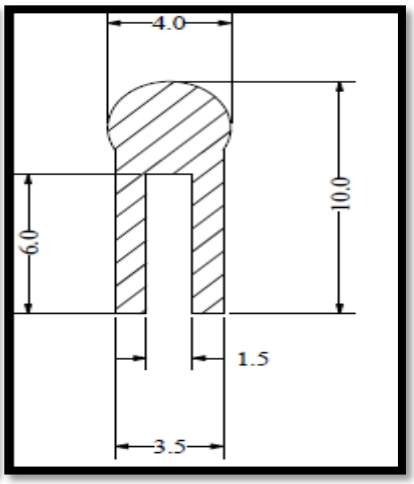
4.0
10.0
6.0
1.5
3.5

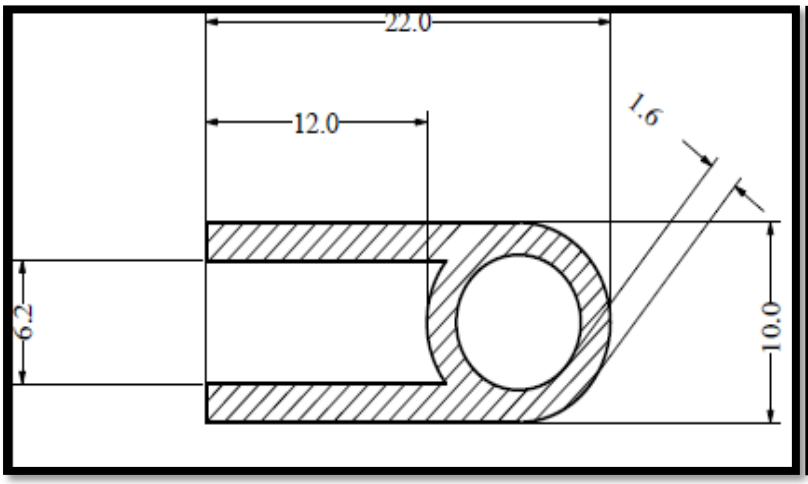
22.0
12.0
1.6
6.2
10.0

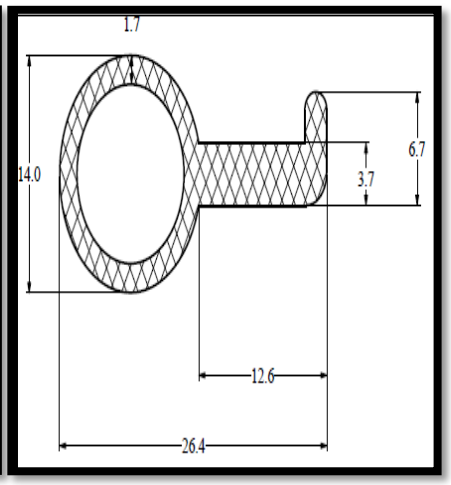
1.7
14.0
6.7
3.7
12.6
26.4

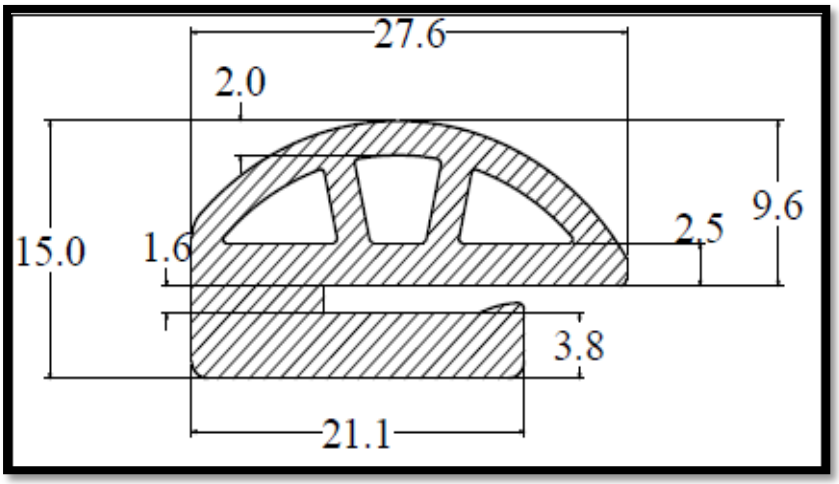
27.6
2.0
15.0
1.6
2.5
9.6
3.8
21.1

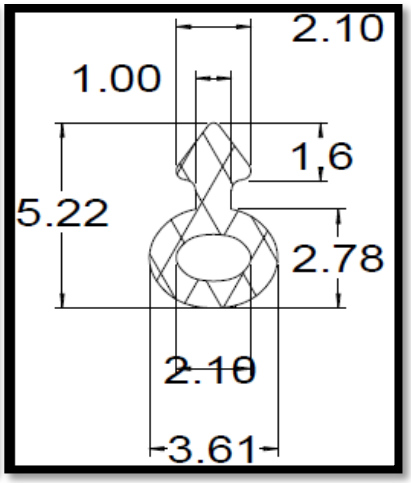
2.10
1.00
1.6
5.22
2.78
2.10
3.61

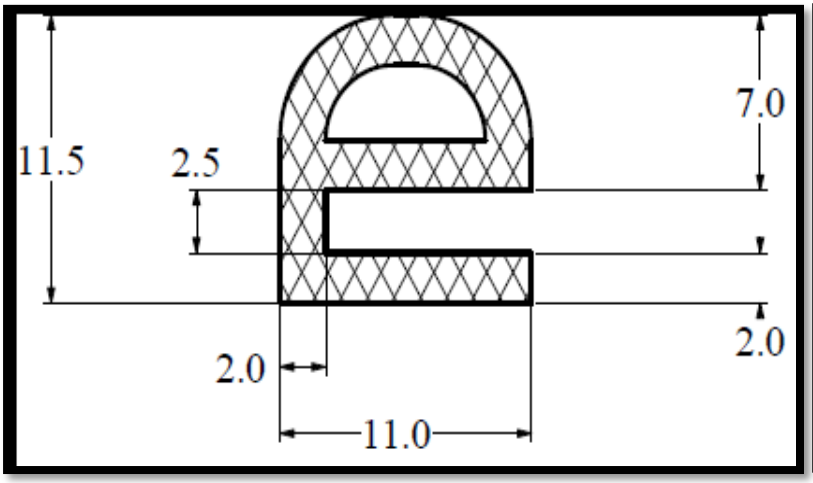
11.5
2.5
7.0
2.0
2.0
11.0

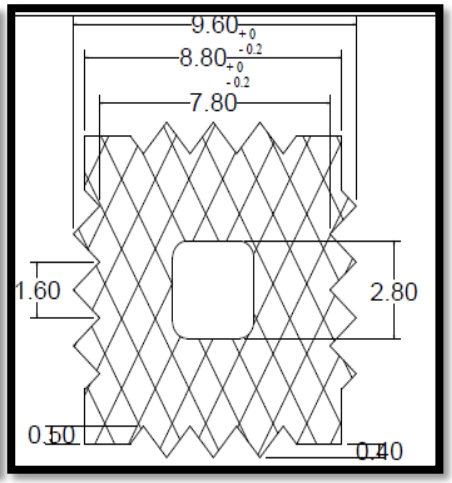
9.60
8.80
7.80
1.60
2.80
0.50
0.40

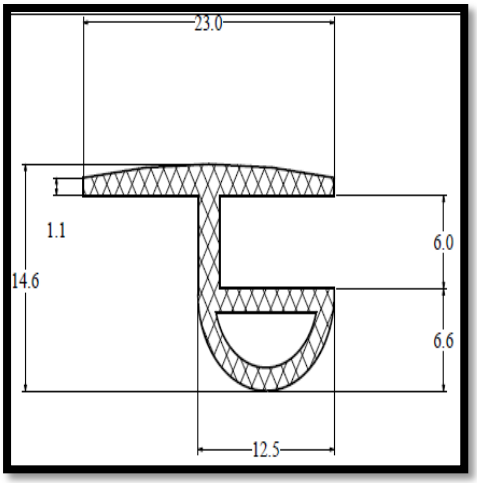
23.0
1.1
14.6
6.0
6.6
12.5

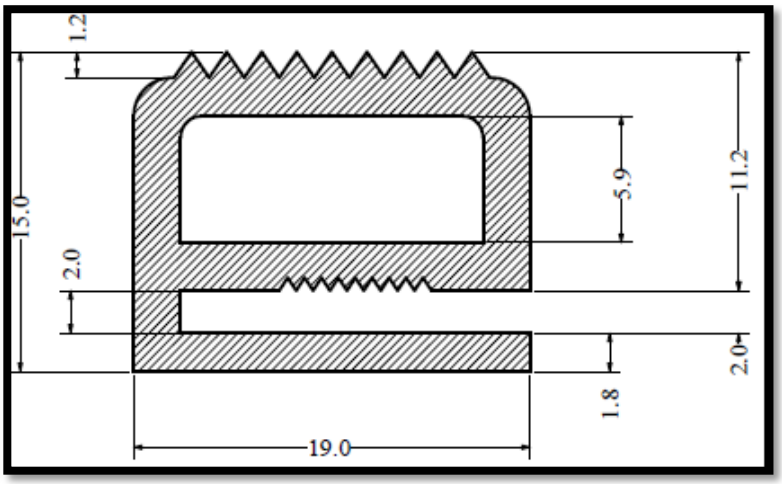
1.2
15.0
2.0
5.9
11.2
2.0
1.8
19.0

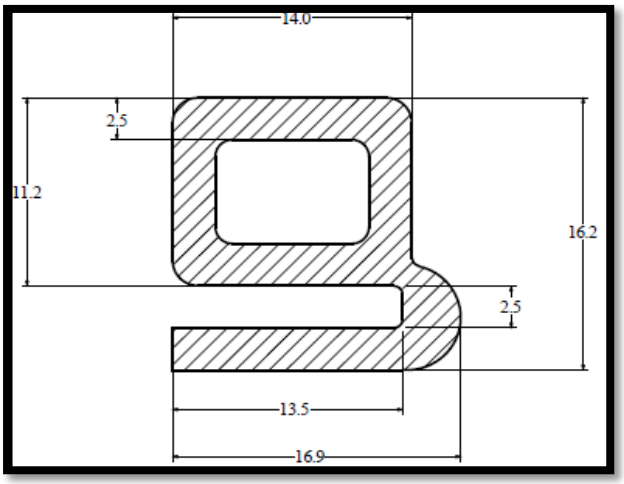
14.0
2.5
11.2
16.2
2.5
13.5
16.9

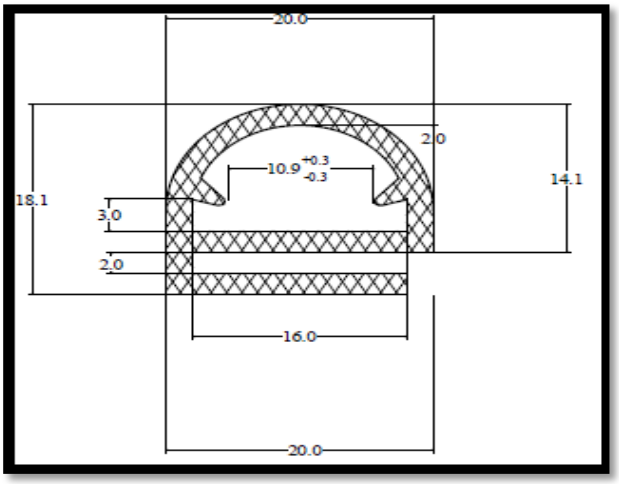
20.0
2.0
10.9 +0.3 -0.3
14.1
18.1
3.0
2.0
16.0
20.0

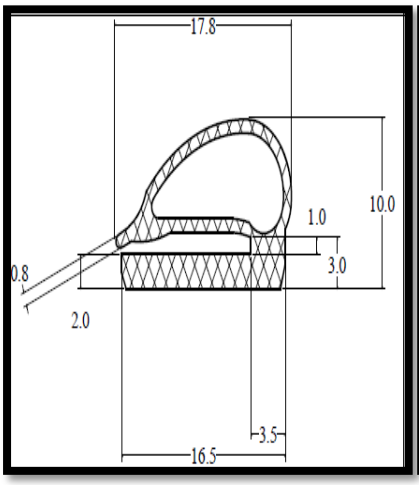
17.8
10.0
1.0
3.0
0.8
2.0
3.5
16.5

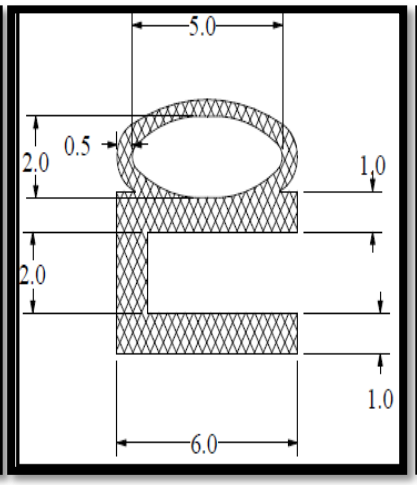
5.0
0.5
2.0
1.0
2.0
1.0
6.0

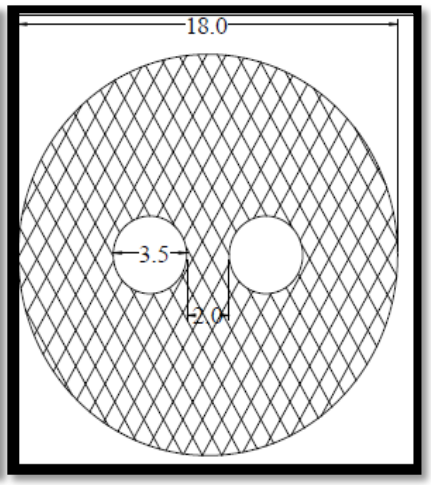
18.0
3.5
2.0

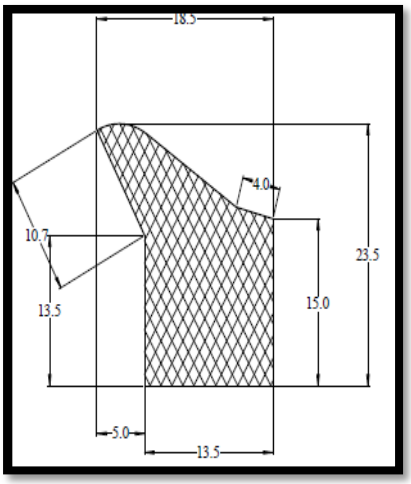
18.5
4.0
10.7
23.5
13.5
15.0
5.0
13.5

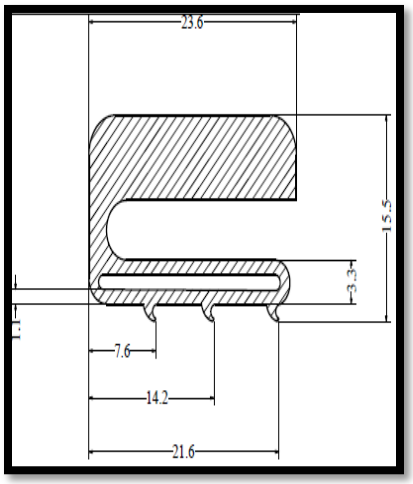
23.6
15.5
3.3
1.1
7.6
14.2
21.6

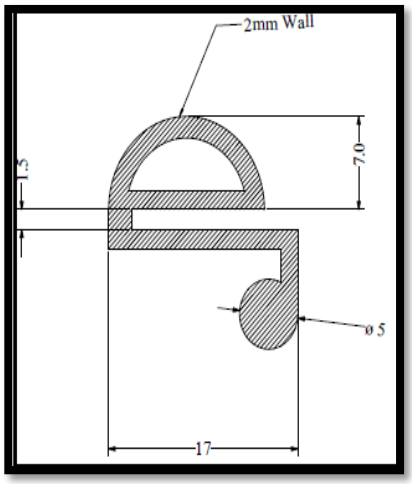
2mm Wall
1.5
7.0
ø 5
17

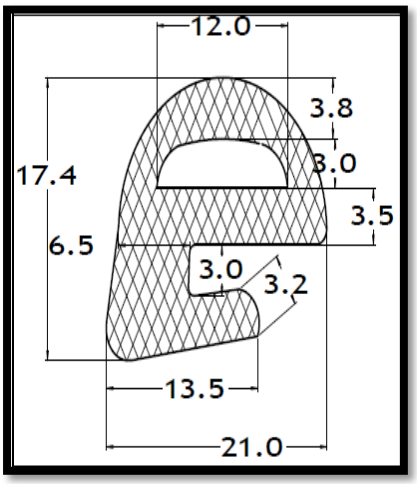
12.0
3.8
17.4
3.0
3.5
6.5
3.0
3.2
13.5
21.0

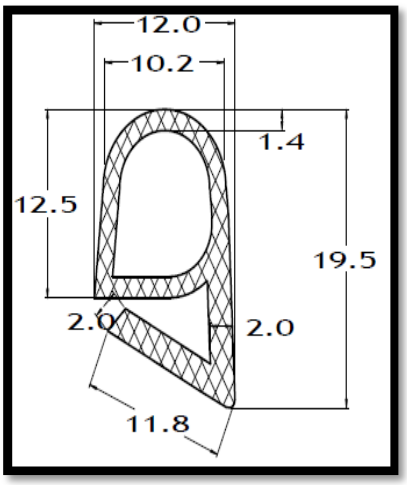
12.0
10.2
1.4
12.5
19.5
2.0
2.0
11.8

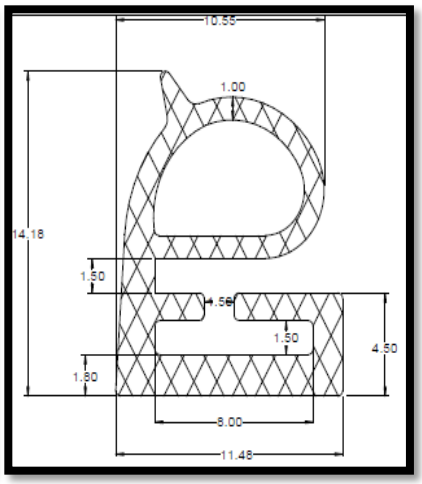
10.55
1.00
14.18
1.50
1.50
1.50
4.50
1.80
8.00
11.48

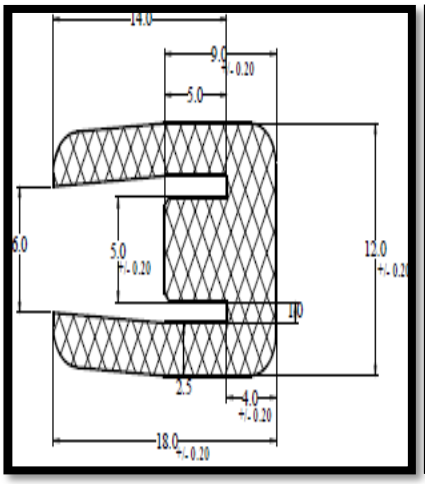
14.0
9.0
+/- 0.20
5.0
6.0
5.0
+/- 0.20
12.0
+/- 0.20
1.0
2.5
4.0
+/- 0.20
18.0
+/- 0.20

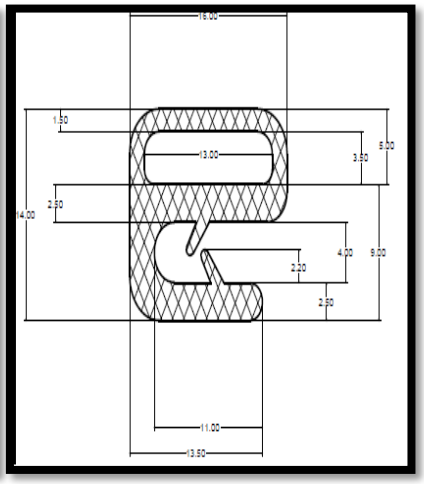
16.00
1.50
13.00
3.50
5.00
2.50
14.00
2.20
4.00
9.00
2.50
11.00
13.50

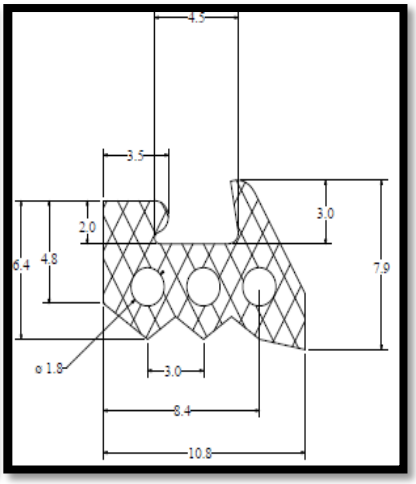
4.5
3.5
2.0
3.0
6.4
4.8
7.9
ø 1.8
3.0
8.4
10.8

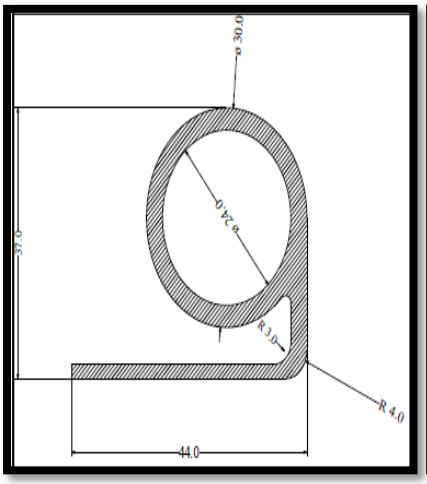
ø 30.0
ø 24.0
37.0
R 3.0
R 4.0
44.0

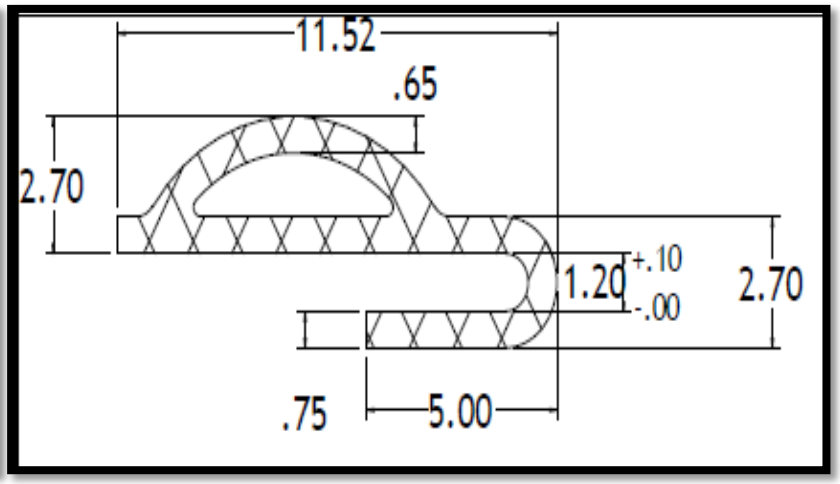
11.52
.65
2.70
1.20
+.10
-.00
2.70
.75
5.00

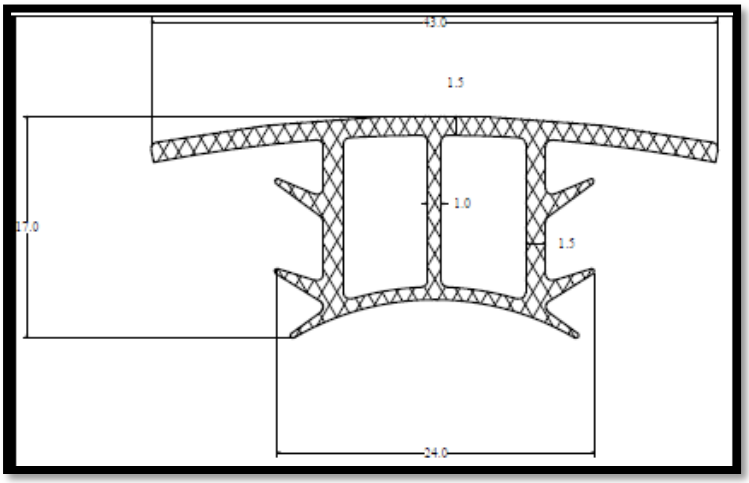
43.0
1.5
17.0
1.0
1.5
24.0

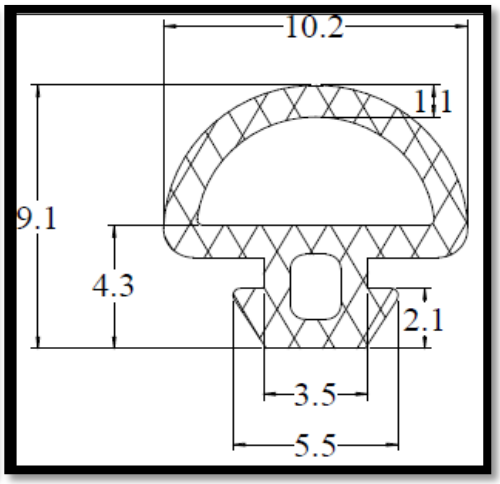
10.2
1.1
9.1
4.3
2.1
3.5
5.5

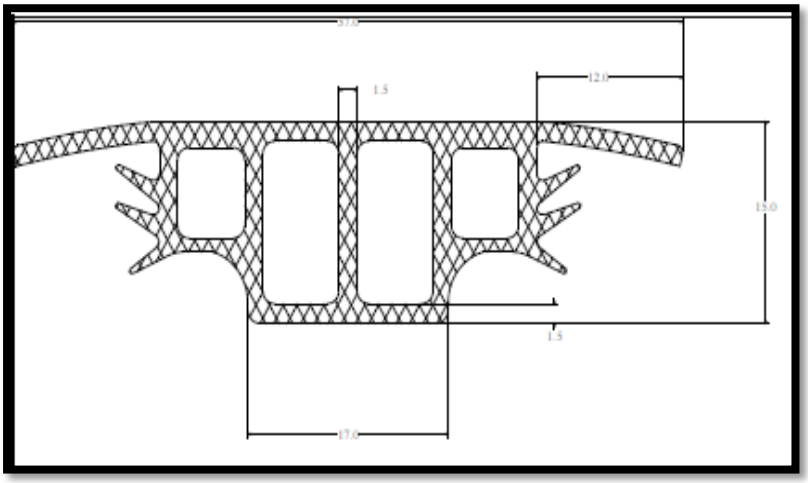
1.5
12.0
15.0
1.5
17.0

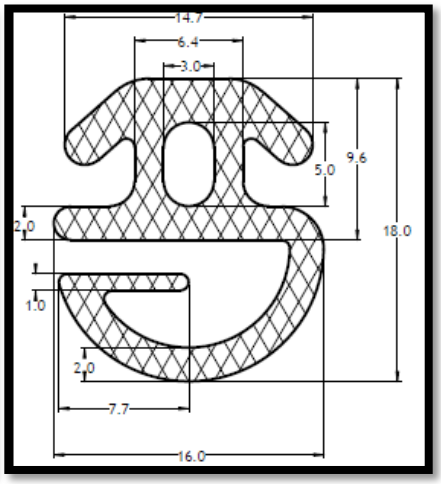
14.7
6.4
3.0
5.0
9.6
2.0
18.0
1.0
2.0
7.7
16.0

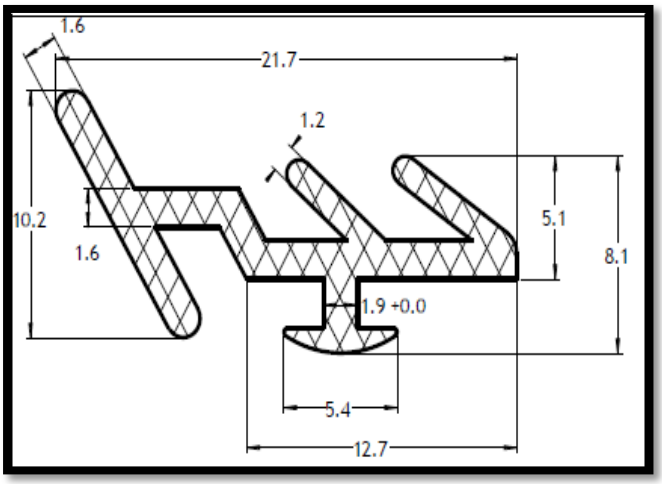
1.6
21.7
1.2
10.2
1.6
5.1
8.1
1.9 +0.0
5.4
12.7

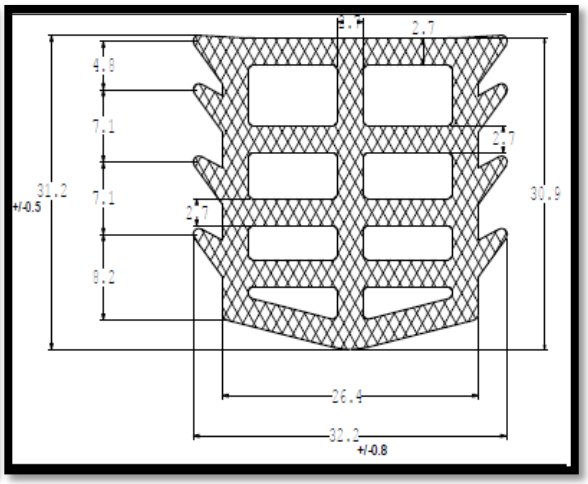
2.7
4.8
7.1
2.7
31.2
+/-0.5
7.1
2.7
30.9
8.2
26.4
32.2
+/-0.8

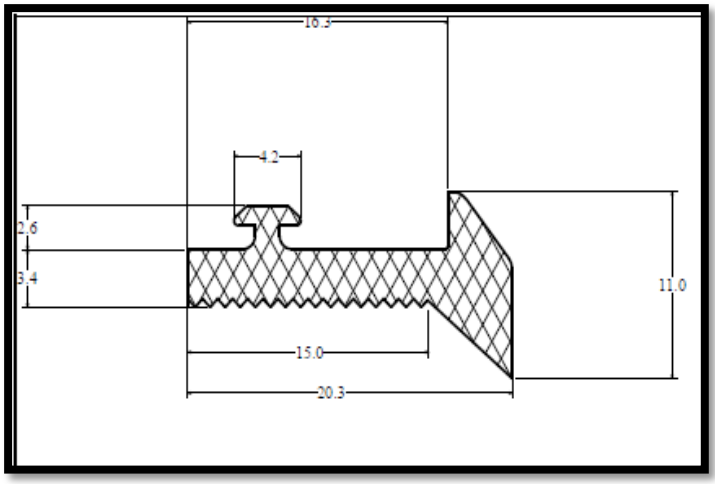
16.3
4.2
2.6
3.4
11.0
15.0
20.3

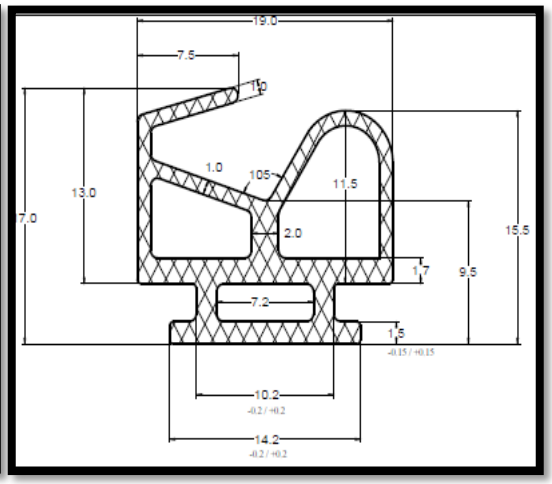
19.0
7.5
1.0
1.0
10.5
11.5
13.0
7.0
2.0
15.5
1.7
9.5
7.2
1.5
-0.15 / +0.15
10.2
-0.2 / +0.2
14.2
-0.2 / +0.2

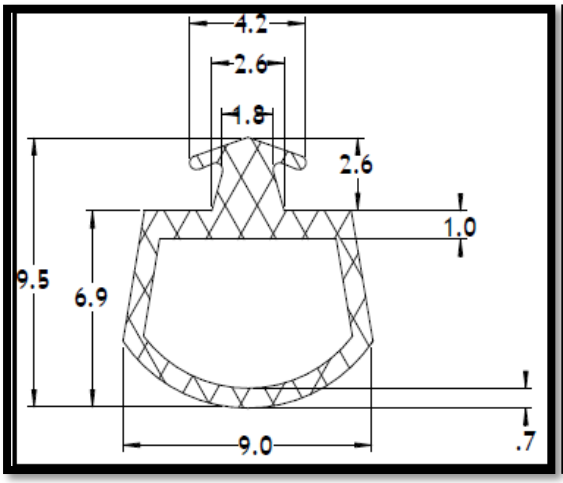
4.2
2.6
1.8
2.6
1.0
9.5
6.9
9.0
.7

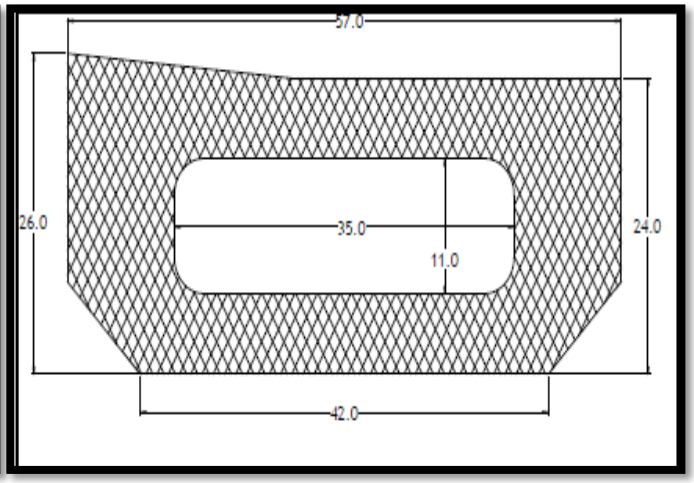
57.0
26.0
35.0
11.0
24.0
42.0

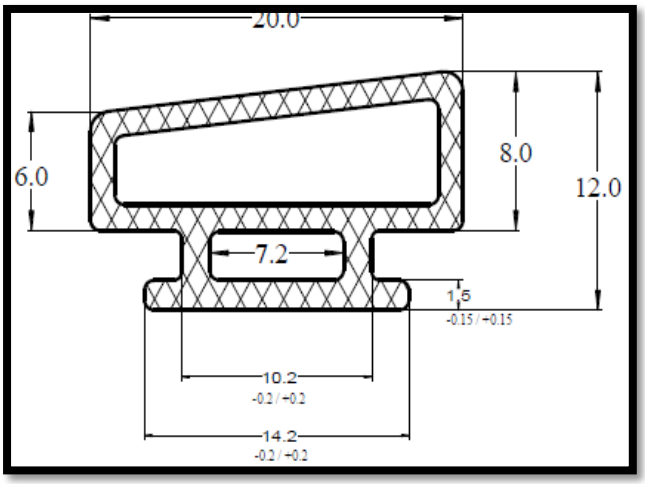
20.0
6.0
8.0
12.0
7.2
1.5
-0.15 / +0.15
10.2
-0.2 / +0.2
14.2
-0.2 / +0.2

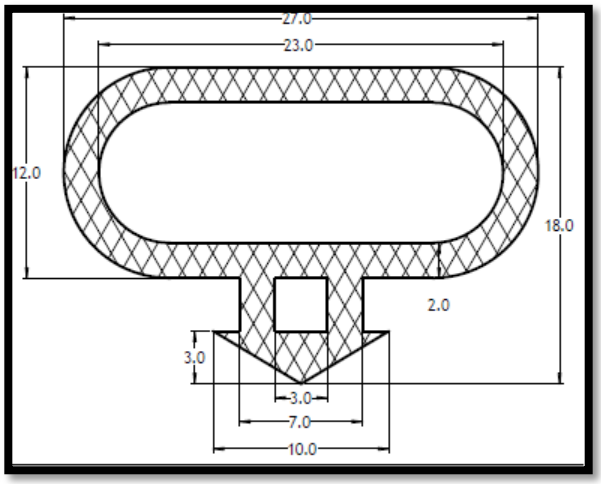
27.0
23.0
12.0
18.0
2.0
3.0
3.0
7.0
10.0

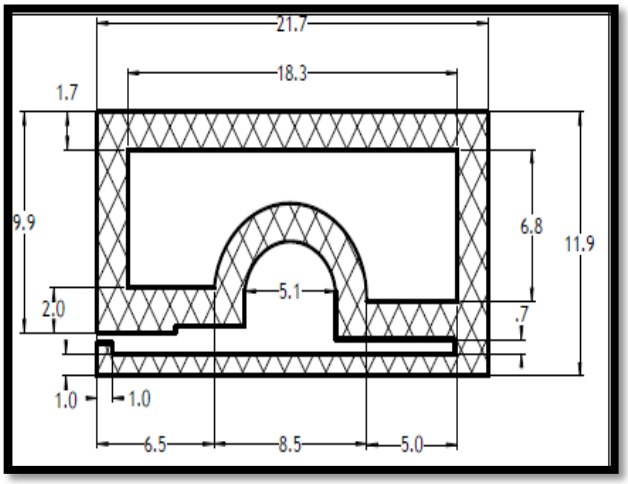
21.7
18.3
1.7
9.9
6.8
11.9
5.1
2.0
.7
1.0
1.0
6.5
8.5
5.0

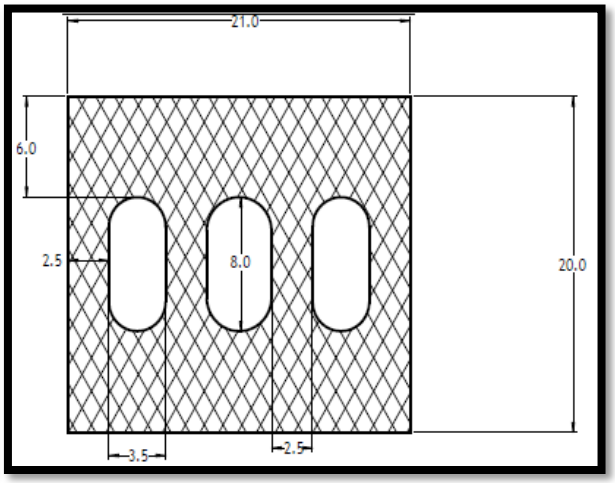
21.0
6.0
2.5
8.0
20.0
3.5
2.5

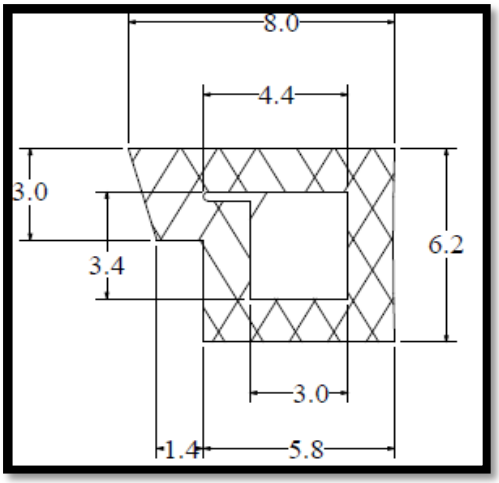
8.0
4.4
3.0
6.2
3.4
3.0
1.4
5.8

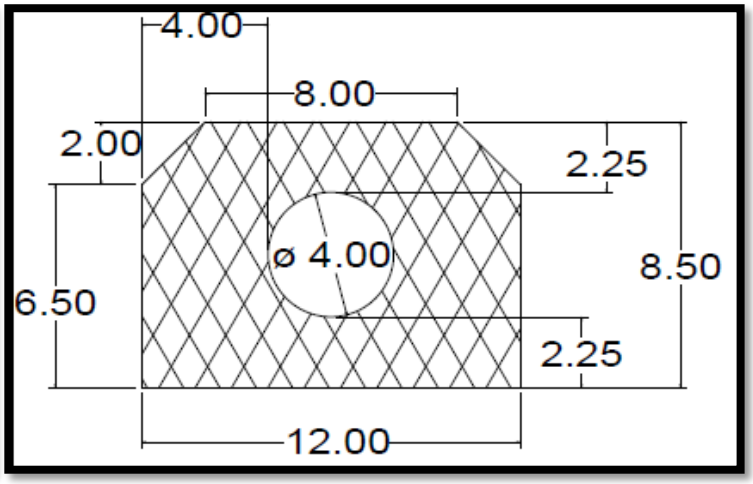
4.00
8.00
2.00
2.25
ø 4.00
8.50
6.50
2.25
12.00

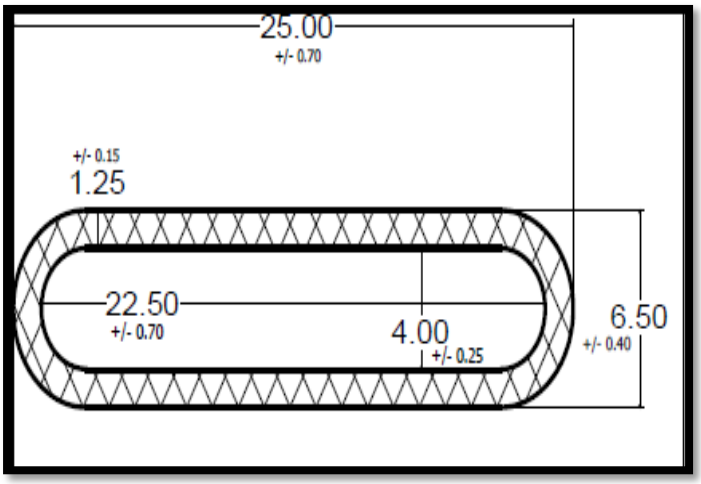
25.00
+/- 0.70
+/- 0.15
1.25
22.50
+/- 0.70
4.00
+/- 0.25
6.50
+/- 0.40

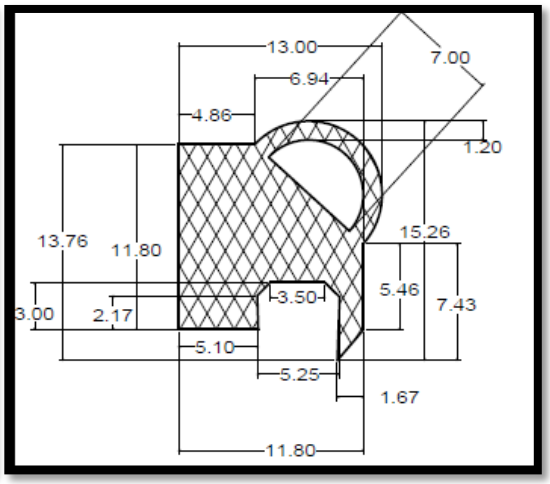
13.00
7.00
6.94
4.86
1.20
13.76
11.80
15.26
3.00
2.17
3.50
5.46
7.43
5.10
5.25
1.67
11.80

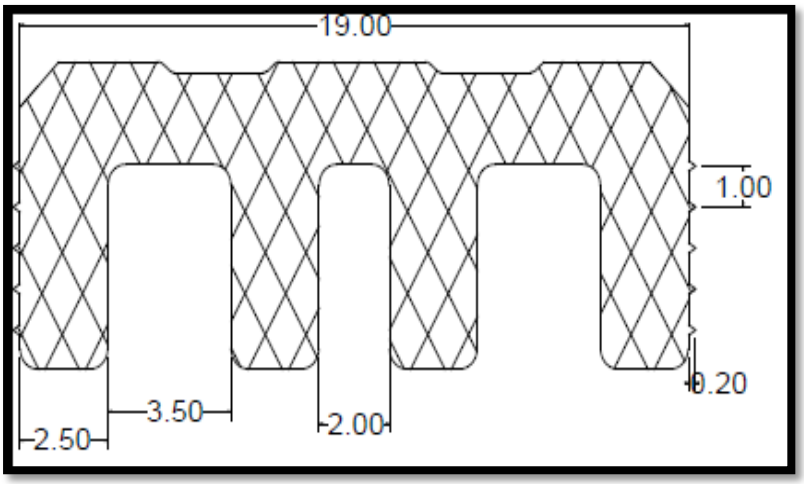
19.00
1.00
0.20
2.50
3.50
2.00

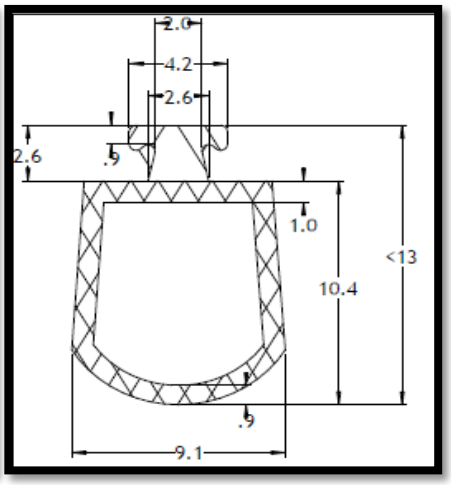
2.0
4.2
2.6
2.6
.9
1.0
<13
10.4
.9
9.1

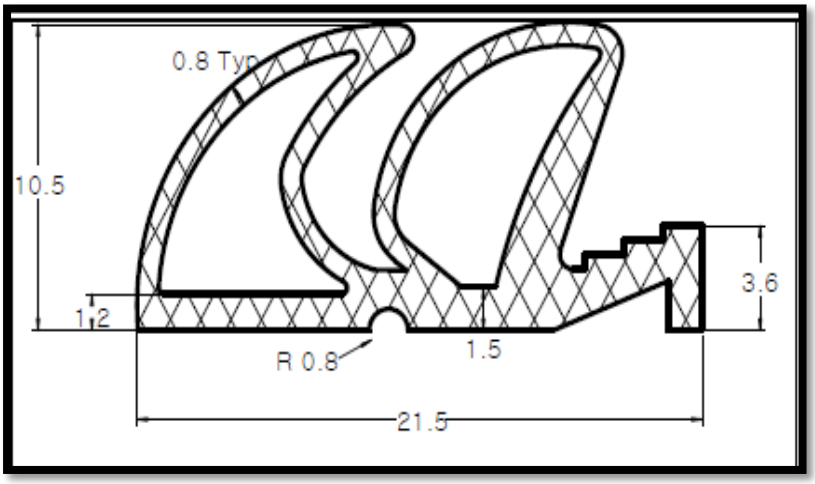
0.8 Typ
10.5
1.2
3.6
R 0.8
1.5
21.5

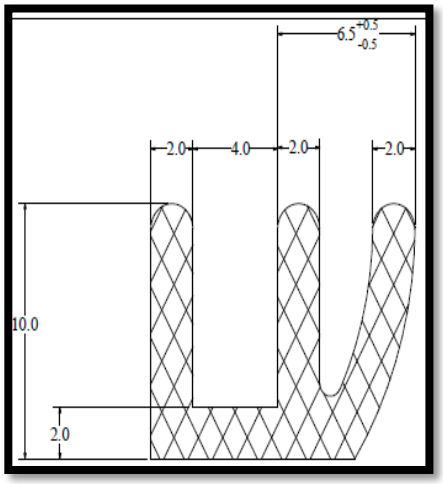
6.5 +0.5 -0.5
2.0
4.0
2.0
2.0
10.0
2.0

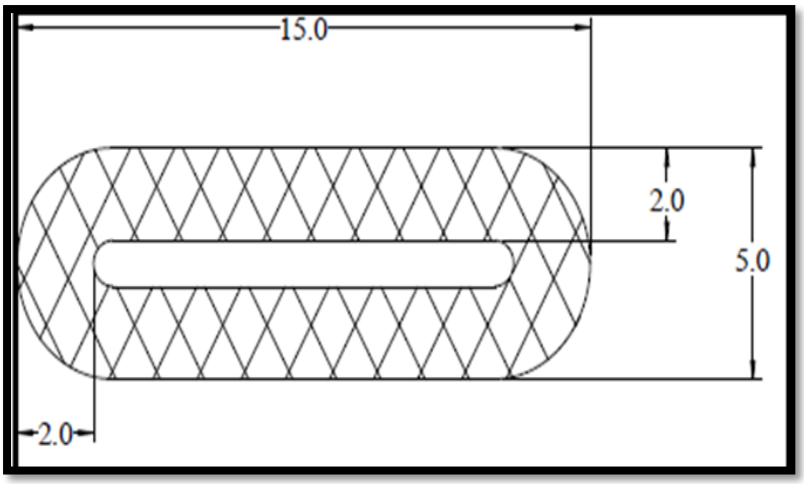
15.0
2.0
5.0
2.0

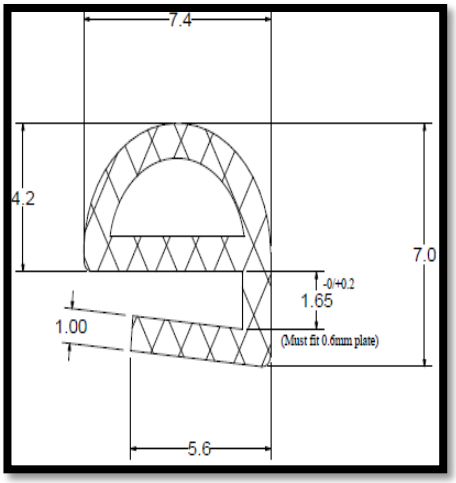
7.4
4.2
7.0
-0/+0.2
1.65
1.00
(Must fit 0.6mm plate)
5.6

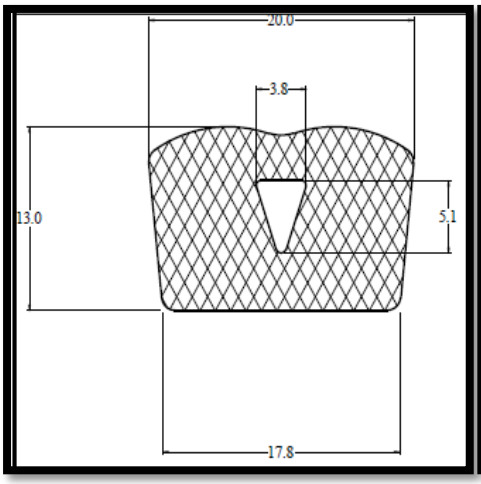
20.0
3.8
13.0
5.1
17.8

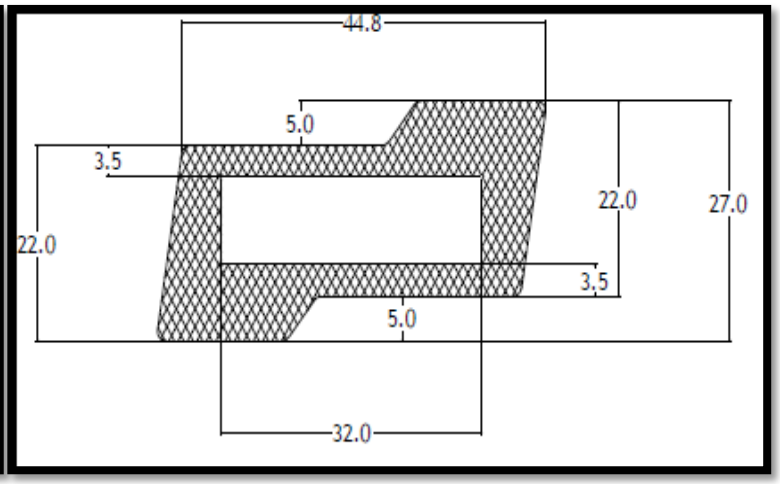
44.8
5.0
3.5
22.0
22.0
27.0
3.5
5.0
32.0

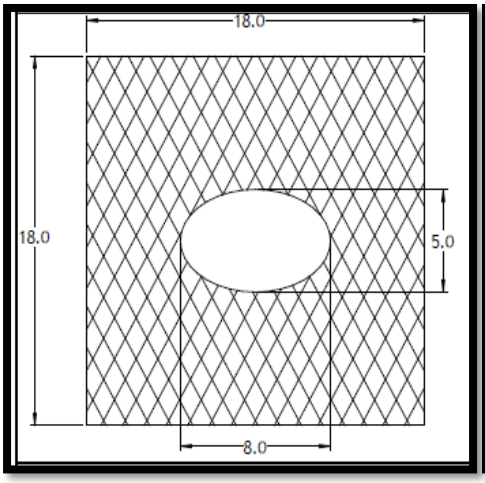
18.0
18.0
5.0
8.0

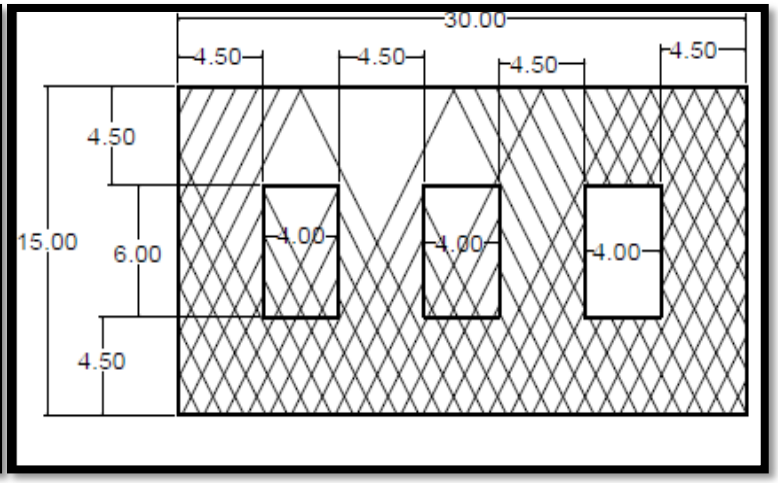
30.00
4.50
4.50
4.50
4.50
4.50
15.00
6.00
4.50
4.00
4.00
4.00

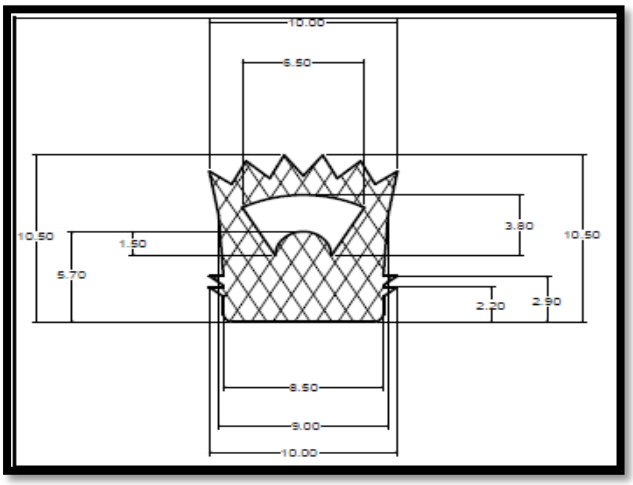
10.00
6.50
10.50
1.50
5.70
3.80
10.50
2.20
2.90
8.50
9.00
10.00

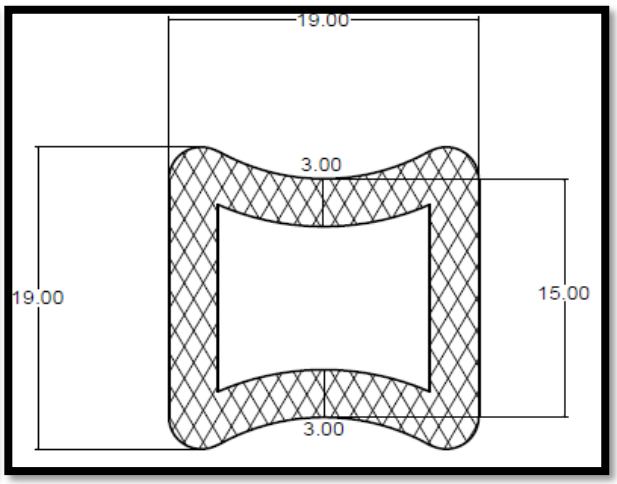
19.00
3.00
19.00
15.00
3.00

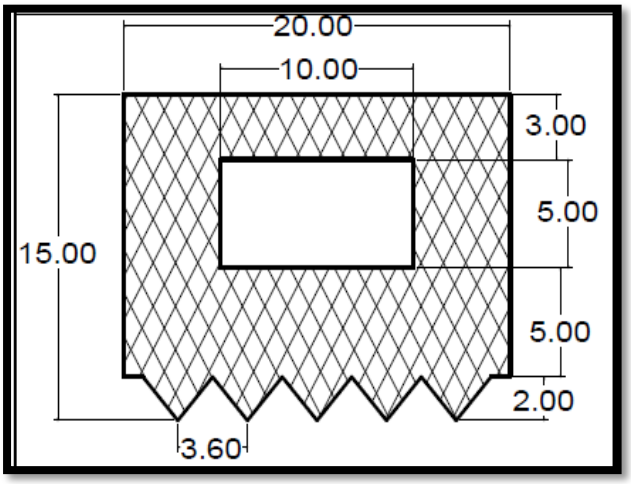
20.00
10.00
3.00
5.00
15.00
5.00
2.00
3.60

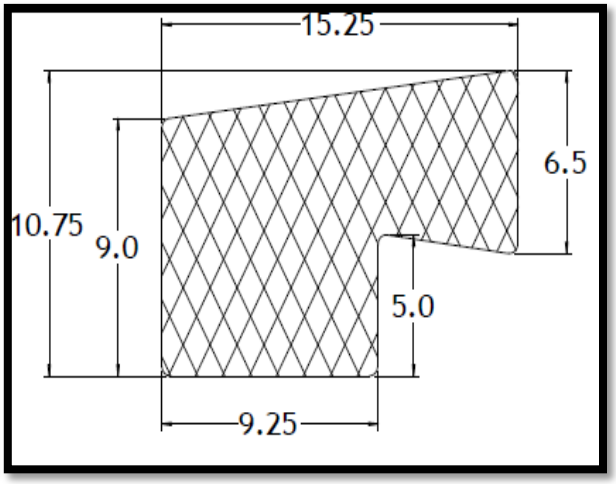
15.25
6.5
10.75
9.0
5.0
9.25

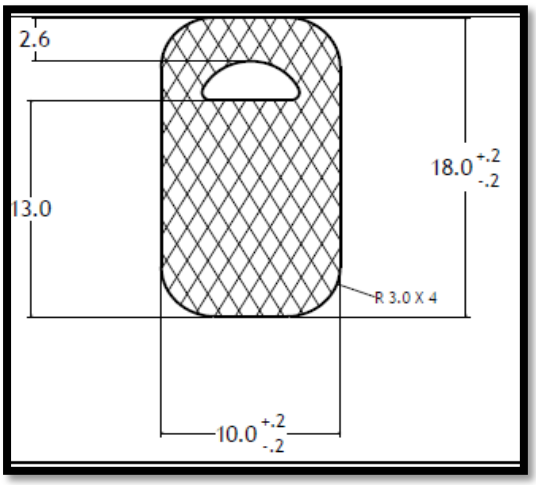
2.6
13.0
18.0 +.2 -.2
R 3.0 X 4
10.0 +.2 -.2

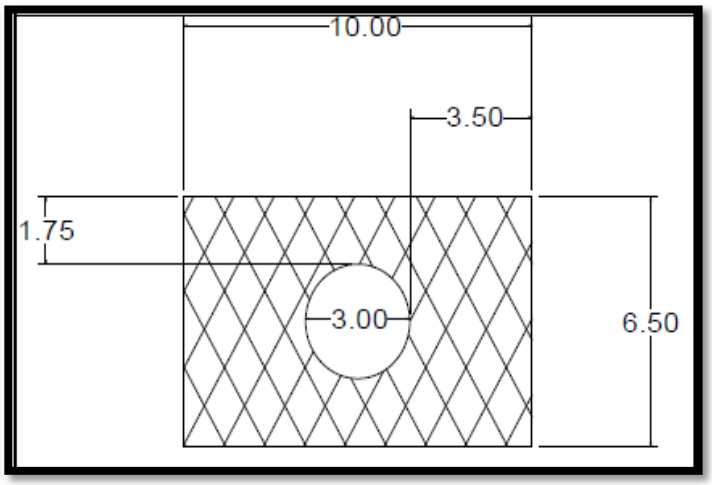
10.00
3.50
1.75
3.00
6.50

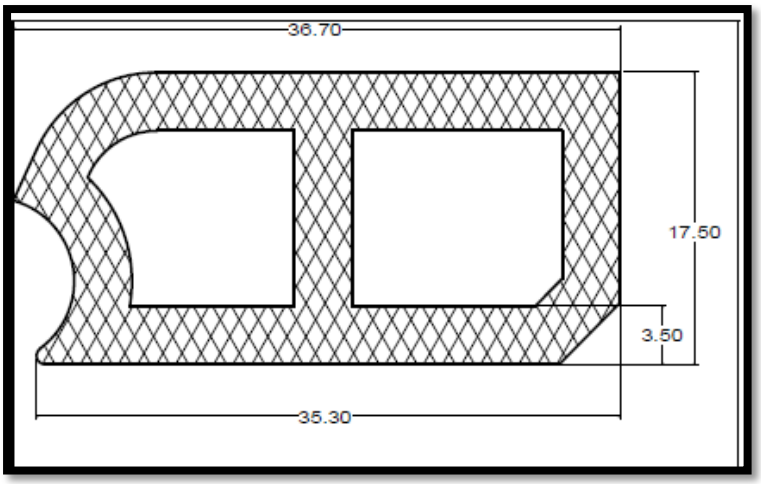
36.70
17.50
3.50
35.30

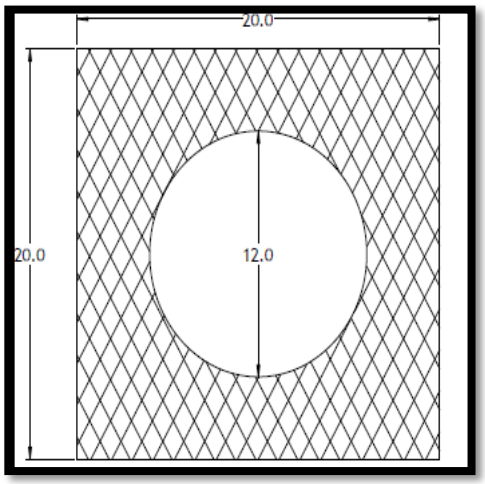
20.0
20.0
12.0